SAIA-Burgess Electronics

SWITCHES • MOTORS • CONTROLLERS

SAIA®PCD

Process Control Devices

PCD7.D250
Industrial terminal
Manual

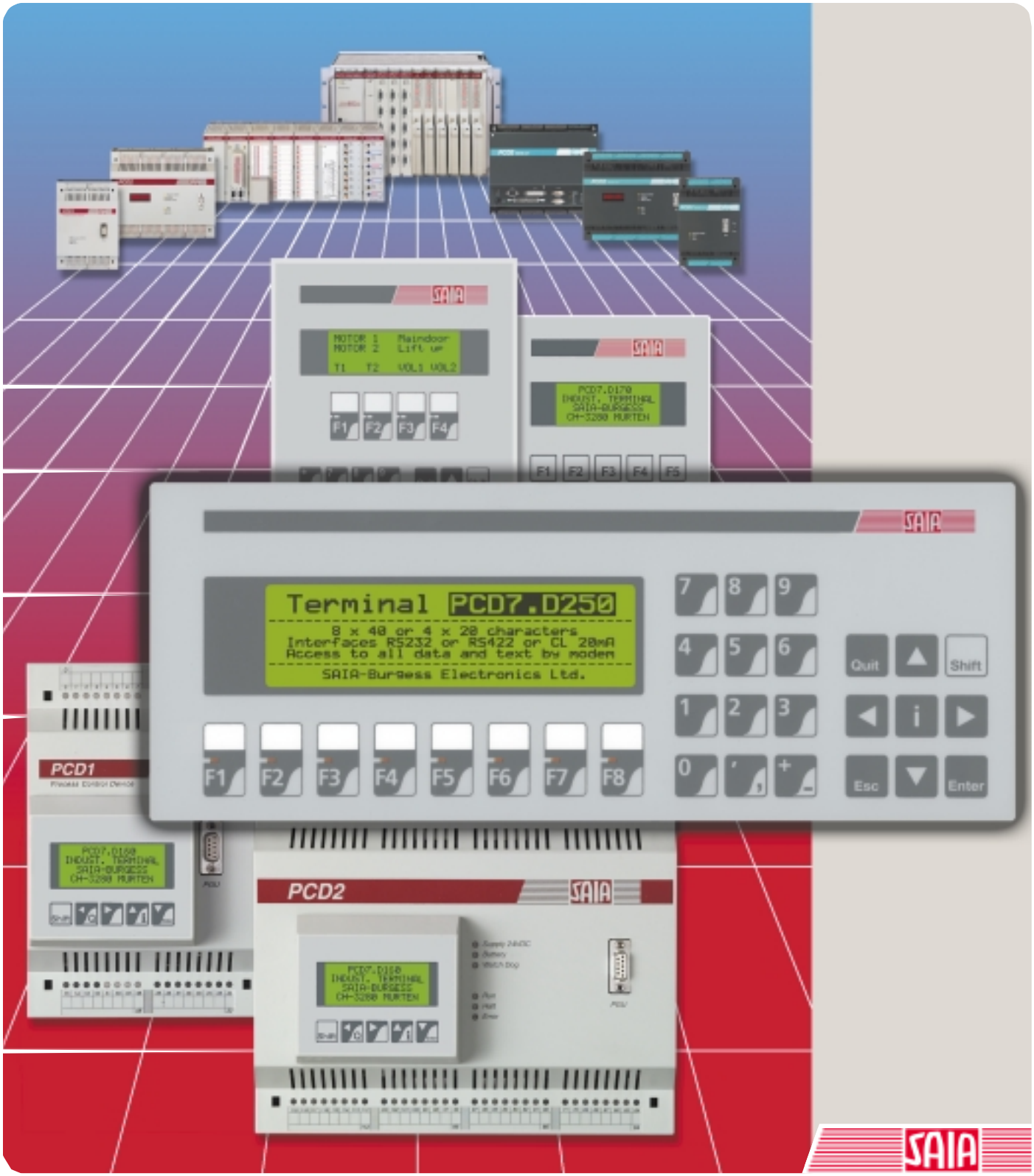

Edition 26/770 E1

SAIA-Burgess Electronics Ltd.
Bahnhofstrasse 18
CH-3280 Murten (Switzerland)
http;//www.saia-burgess.com

BA: Electronic Controllers Telephone 026 / 672 71 11
Telefax 026 / 670 44 43

SAIA-Burgess Companies

Switzerland
SAIA-Burgess Electronics AG
Freiburgstrasse 33
CH-3280 Murten
☎ 026 672 77 77, Fax 026 670 19 83

Germany
SAIA-Burgess Electronics GmbH
Daimlerstrasse 1k
D-63303 Dreieich
☎ 06103 89 060, Fax 06103 89 06 66

Austria
SAIA-Burgess Electronics Ges.m.b.H.
Schallmooser Hauptstrasse 38
A-5020 Salzburg
☎ 0662 88 49 10, Fax 0662 88 49 10 11

Italy
SAIA-Burgess Electronics S.r.l.
Via Cadamosto 3
I-20094 Corsico MI
☎ 02 48 69 21, Fax 02 48 60 06 92

France
SAIA-Burgess Electronics Sàrl.
10, Bld. Louise Michel
F-92230 Gennevilliers
☎ 01 46 88 07 70, Fax 01 46 88 07 99

Nederlands
SAIA-Burgess Electronics B.V.
Hanzeweg 12c
NL-2803 MC Gouda
☎ 0182 54 31 54, Fax 0182 54 31 51

Belgium
SAIA-Burgess Electronics Belgium
Avenue Roi Albert 1er, 50
B-1780 Wemmel
☎ 02 456 06 20, Fax 02 460 50 44

Hungary
SAIA-Burgess Electronics Automation Kft.
Liget utca 1.
H-2040 Budaörs
☎ 23 501 170, Fax 23 501 180

Representatives

Great Britain
Canham Controls Ltd.
25 Fenlake Business Centre, Fengate
Peterborough PE1 5BQ UK
☎ 01733 89 44 89, Fax 01733 89 44 88

Denmark
Malthe Winje Automation AS
Håndværkerbyen 57 B
DK-2670 Greve
☎ 70 20 52 01, Fax 70 20 52 02

Norway
Malthe Winje Automasjon AS
Haukelivn 48
N-1415 Oppegård
☎ 66 99 61 00, Fax 66 99 61 01

Sweden
Malthe Winje Automation AB
Truckvägen 14A
S-194 52 Upplands Våsby
☎ 08 795 59 10, Fax 08 795 59 20

Suomi/ Finland
ENERGEL OY
Atomitie 1
FIN-00370 Helsinki
☎ 09 586 2066, Fax 09 586 2046

Portugal
INFOCONTROL Electronica e Automatismo LDA.
Praceta Cesário Verde, No 10 s/cv, Massamá
P-2745 Queluz
☎ 21 430 08 24, Fax 21 430 08 04

Spain
Tecnosistemas Medioambientales, S.L.
Poligono Industrial El Cabril, 9
E-28864 Ajalvir, Madrid
☎ 91 884 47 93, Fax 91 884 40 72

Czech Republic
ICS Industrie Control Service, s.r.o.
Modranská 43
CZ-14700 Praha 4
☎ 2 44 06 22 79, Fax 2 44 46 08 57

Poland
SABUR Ltd.
ul. Druzynowa 3A
PL-02-590 Warszawa
☎ 22 844 63 70, Fax 22 844 75 20

Australia
Siemens Building Technologies Pty. Ltd.
Landis & Staefa Division
411 Ferntree Gully Road
AUS-Mount Waverley, 3149 Victoria
☎ 3 9544 2322, Fax 3 9543 8106

Argentina
MURTEN S.r.l.
Av. del Libertador 184, 4° “A”
RA-1001 Buenos Aires
☎ 054 11 4312 0172, Fax 054 11 4312 0172

After sales service

USA
SAIA-Burgess Electronics Inc.
1335 Barclay Boulevard
Buffalo Grove, IL 60089, USA
☎ 847 215 96 00, Fax 847 215 96 06

Issue : 22.11.2000

SAIA® Process Control Devices

Manual

Industrial terminal

PCD7.D250

Edition 26/770 E1 - 06.2000

Subject to technical changes

Updates

Manual : Industrial terminal PCD7.D250 - Edition E1

Date	Chapter	Page	Description
01.12.2000	4.3	4-3	Serial interface COM 1 : Operation modes

Contents

Page

Please note :

A number of detailed manuals are available to aid installation and operation of the SAIA® PCD. These are for use by technically qualified staff, who may also have successfully completed one of our "workshops".

To obtain the best performance from your SAIA® PCD, closely follow the guidelines for assembly, wiring, programming and commissioning given in these manuals. In this way, you will also become one of the many enthusiastic SAIA® PCD users.

If you have any technical suggestions or recommendations for improvements to the manuals, please let us know. A form is provided on the last page of this manual for your comments.

Summary

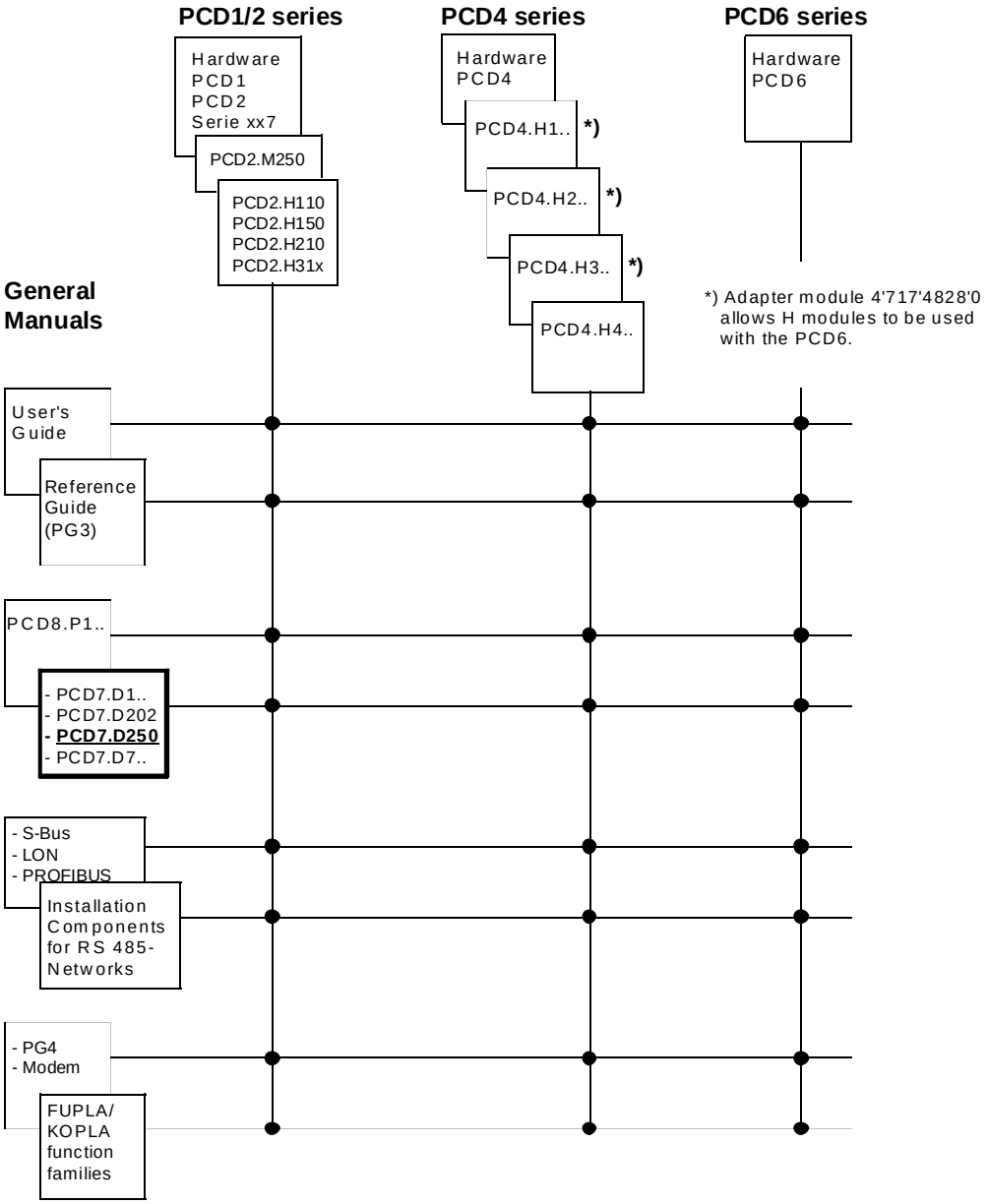

Reliability and safety of electronic controllers

SAIA-Burgess Electronics Ltd. is a company which devotes the greatest care to the design, development and manufacture of its products:

- state-of-the-art technology
- compliance with standards
- ISO 9001 certification
- international approvals: e.g. Germanischer Lloyd, UL, Det Norske Veritas, CE mark ...
- choice of high-quality componentry
- quality control checks at various stages of production
- in-circuit tests

Despite every care, the excellent quality which results from this does have its limits. It is therefore necessary, for example, to reckon with the natural failure of components. For this reason SAIA-Burgess Electronics Ltd. provides a guarantee according to the “General terms and conditions of supply”.

The plant engineer must in turn also contribute his share to the reliable operation of an installation. He is therefore responsible for ensuring that controller use conforms to the technical data and that no excessive stresses are placed on it, e.g. with regard to temperature ranges, overvoltages and noise fields or mechanical stresses.

In addition, the plant engineer is also responsible for ensuring that a faulty product in no case leads to personal injury or even death, nor to the damage or destruction of property. The relevant safety regulations should always be observed. Dangerous faults must be recognized by additional measures and any consequences prevented. For example, outputs which are important for safety should lead back to inputs and be monitored from software. Consistent use should be made of the diagnostic elements of the PCD, such as the watchdog, exception organization blocks (XOB) and test or diagnostic instructions.

If all these points are taken into consideration, the SAIA® PCD will provide you with a modern, safe programmable controller to control, regulate and monitor your installation with reliability for many years.

1. Application

The new PCD7.D.. control terminals have been developed for tough industrial use, such as occurs in direct contact with production machines. In combination with the intelligent text output of the SAIA® PCD, it provides a simple way of implementing menu-driven user prompting.

The ..D250 user has 2 different type sizes available (producing 8 x 40 or 4 x 20 characters). This makes the ..D250 suitable both for building automation and industrial applications.

With the latest high contrast back-lit LC display, the PCD7.D250 model can display any type of information such a temperature, pressure, unit numbers, date, time, etc., or messages about operating states or alarms.

Under the abrasion-proof polyester foil there are 29 tactile feedback keys, enabling any necessary operating data or processing functions to be entered via the serial data interface, prompted by a menu controlled by the SAIA® PCD.

Labelling strips can be slid beneath the partially transparent front-panel foil: a simple way of enabling the user to create personalized key labels whenever required, or even to attach his own label.

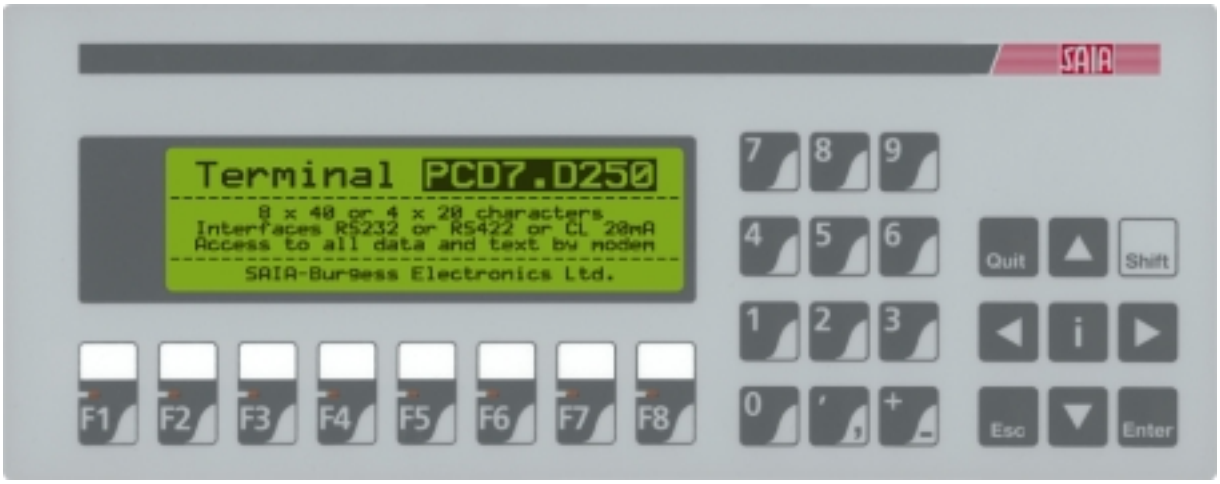

Quick guide to operating the PCD7.D250 terminal

The following chapters supply detailed descriptions of the broad functional possibilities provided by the ..D250 terminal. In any practical application, probably only a small part of them will be used.

In order to give the beginner a brief guide to simple text output it is advisable, before studying all tests and instructions individually, to do one of the program examples from chapter 8 as a practical exercise.

In this way it will be obvious how simple it is in practice to work with the PCD and the ..D250 terminal.

2. Technical data

Function data

Display	LC-display, supertwist LED back lighting 8 lines of 40 characters, height 3.7 mm or 4 lines of 20 characters, height 7.5 mm, with cursor Character set: ASCII characters 32 to 127 plus IBM Extended Character Set 437
Keyboard	Foil keyboard with tactile feedback Numeric keypad with 12 keys, 18 mm spacing Control keypad with 9 keys, 18 mm spacing 8 function keys, 20 mm spacing, with red LEDs and slide-in labelling strip
Data interface	Communications interface (for SAIA® PCD) for text delivery and control functions COM 1: RS 232 (fixed) COM 0: for communications modules PCD7.F2..for RS 422 or current loop 20 mA Transmission speed: 110...9600 bps

Electrical data

Supply voltage	24 VDC +30 % / –20 %, smoothed, with reserve battery protection, or 19 VAC +/–15 %, full-wave rectified, with reverse battery protection
Power consumption	max. 320 mA at 24 VDC
Connection	Power supply via plug-in screw terminals for wires of max. 2.5 mm^2 Data interface via 9-pole D-type jack
Interference	emission: CE mark according to EN 50 081-1 immunity: CE mark according to EN 50 082-2

General data

Housing	Aluminium front with polyester foil, front panel protection IP 65 Backplate in aluminium sheet, protection IP 30	
Dimensions	See dimension drawing for measurements and control panel cutout (chapter 3)	
Mounting	with 6 stud bolts	
Ambient temperature	Operation Storage	0...50 °C –25...+70 °C
Atmospheric humidity	5...95 % relative humidity without condensation, according to IEC 1131-2 and DIN 40 040 class F	
Mechanical resistance	Vibration 10...57 Hz, 0.075 mm or 57...150 Hz, 1.0 g according to IEC 68-2-6	

3. Dimensions

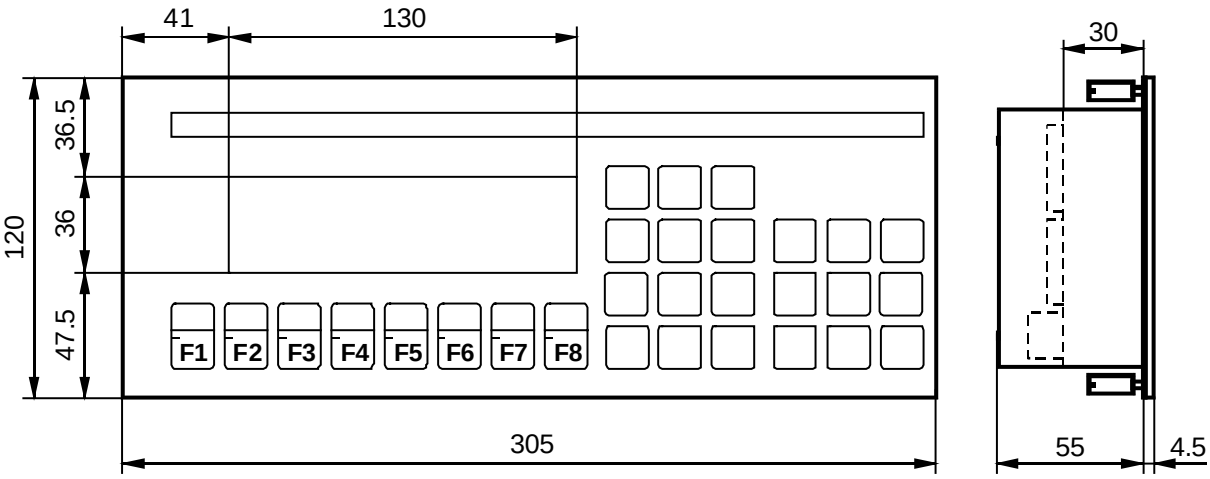

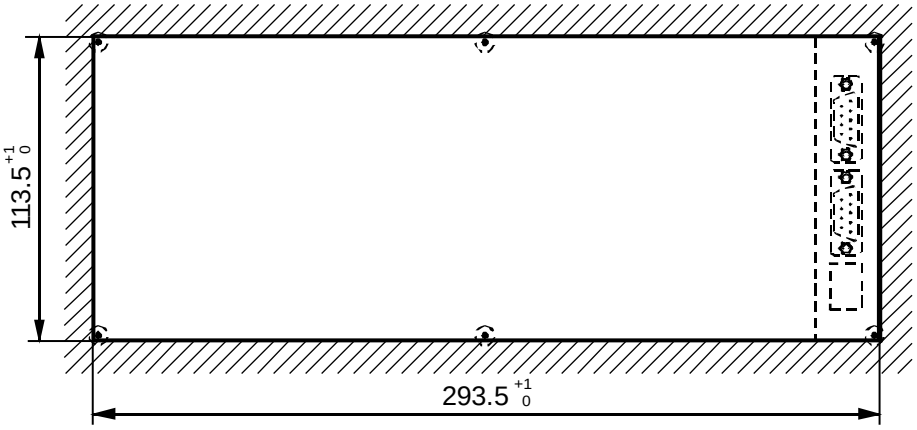

Panel cutout

Mounting with stud bolts

Notes :

4. Hardware

4.1 Power supply / connector

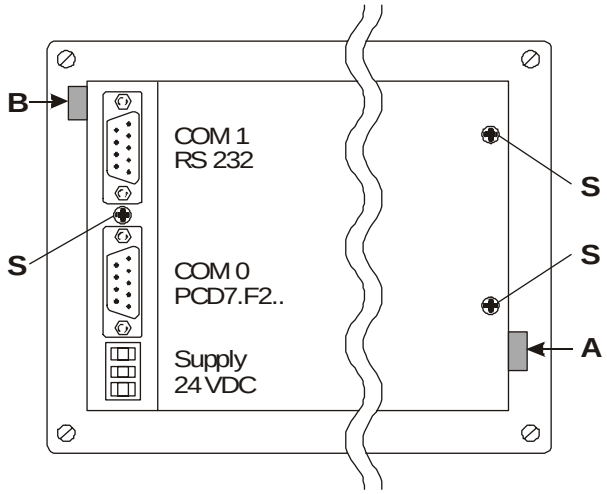

Power supply via plug-in screw terminals for wires of max. 2.5 mm² (flexible wires with ferrules max. 1.5 mm²).

24 VDC +30 % / –20 %, smoothed or
19 VAC ±15 % full wave rectified with reverse battery protection.

The labelling strip is inserted at point A for the 8 function keys, or at point B for another label.

A good earth connection is imperative for perfect operation ! Moreover, whenever the cover has been removed, cover screw S must be screwed back tightly to restore a good connection to frame ground.

Power supply with full wave rectified AC

External supply **PCD7.D250**

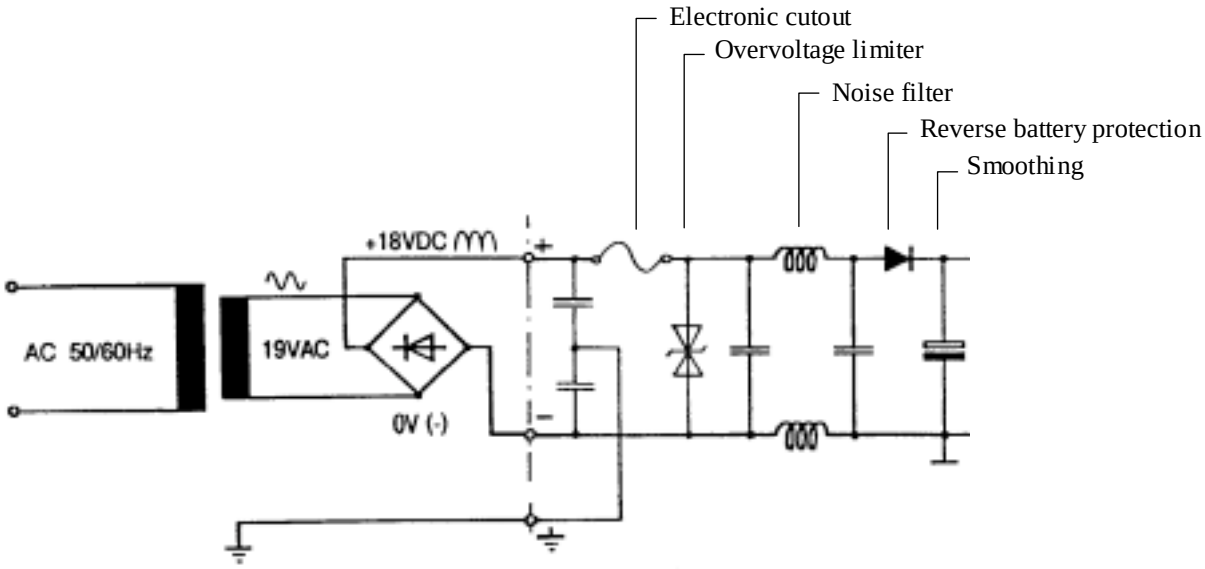

4.2 Firmware

The firmware is stored on an EPROM. If it has to be updated, the back cover should be lifted off and afterwards screwed back down firmly using the 3 screws.

4.3 Serial interface COM 1 : RS 232 (basic equipment)

via 9-pole D-type jack (female)

Operation modes

1) With or without HANDSHAKING			
Baud rate	Type	Handshaking	Control
up to 9600 Baud	MC0	without	---
up to 9600 Baud	MC1	with	RTS/CTS
up to 9600 Baud	MC2	with	XON/XOFF
2) With HANDSHAKING only			
Baud rate	Type	Handshaking	Control
19200 Baud	MC1	with	RTS/CTS
19200 Baud	MC2	with	XON/XOFF

4.3.1 Without RTS/CTS handshaking or with XON/XOFF handshaking

Instructions apply for all PCD communications channels:

– At the terminal, RTS must be connected with CTS.

– If the refresh rate is low (300…500 ms) it is possible to work with PCD communications mode MC0 up to 9600 Baud.

– However, to avoid an overflow of the input buffer, it is advisable to work with XON/XOFF handshaking (MC2 mode).

a) ..D250 terminal to PGU connector of PCD

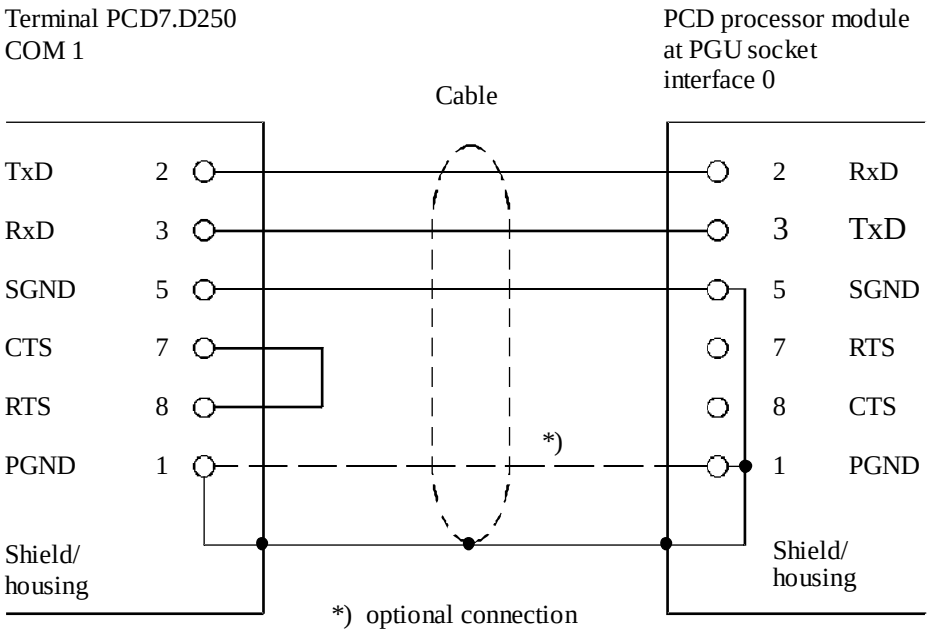

PCD7.K412 cable can be used for this connection (see chapter 10).

b) ..D250 terminal to PCD processors, channels 1 to 3

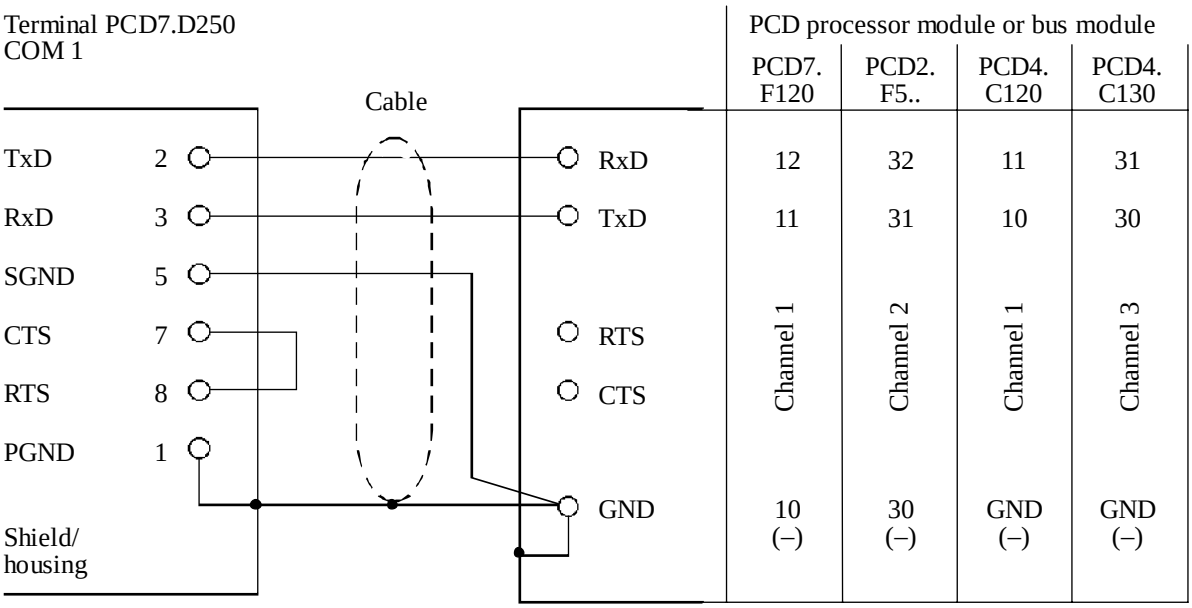

PCD7.K422 cable can be used for this connection (see chapter 10).

4.3.2 With RTS/CTS handshaking

The corresponding PCD communications channel must be assigned with MC1 mode.

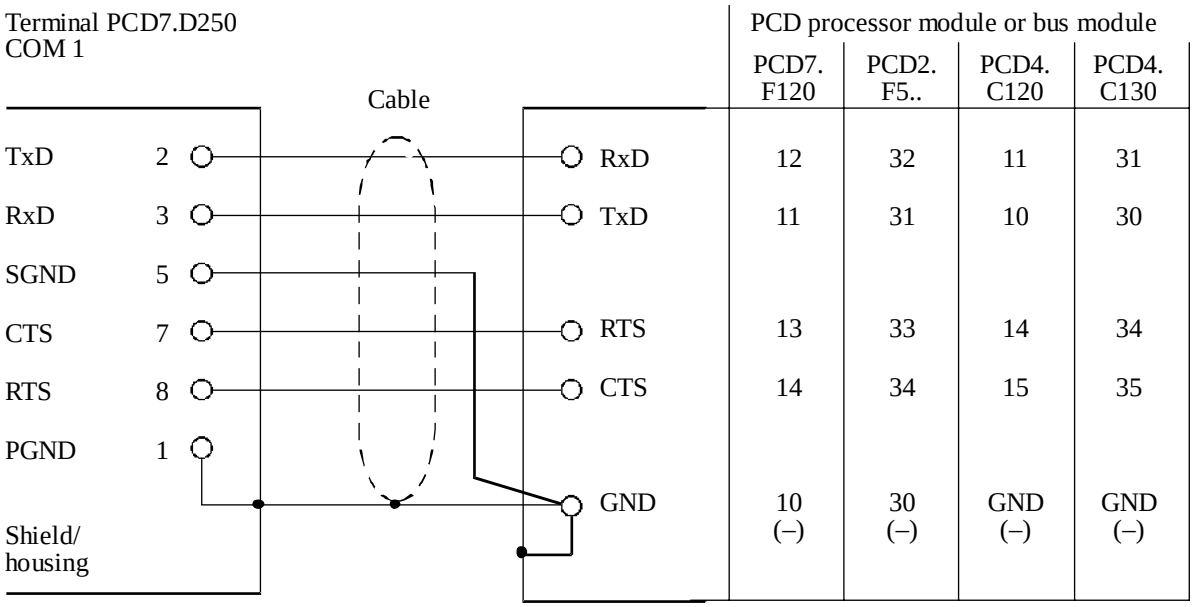

4.4 Serial interface COM 0 : equipped with communications modules PCD7.F2..

4.4.1 RS 422 with communications module PCD7.F210

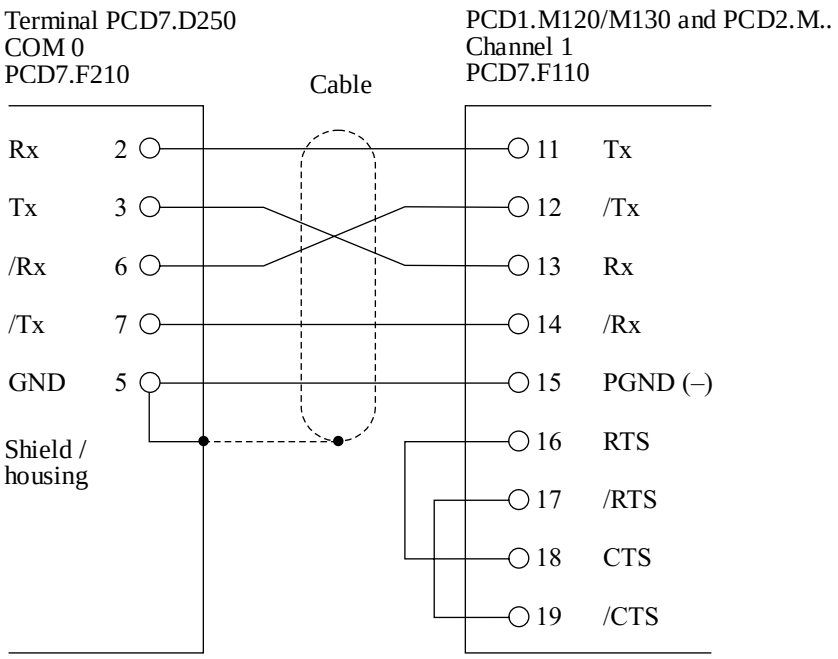

Jumper J1 open, communications mode MC0 or MC2.

4.4.2 Current loop 20 mA (TTY) with communications module PCD7.F231

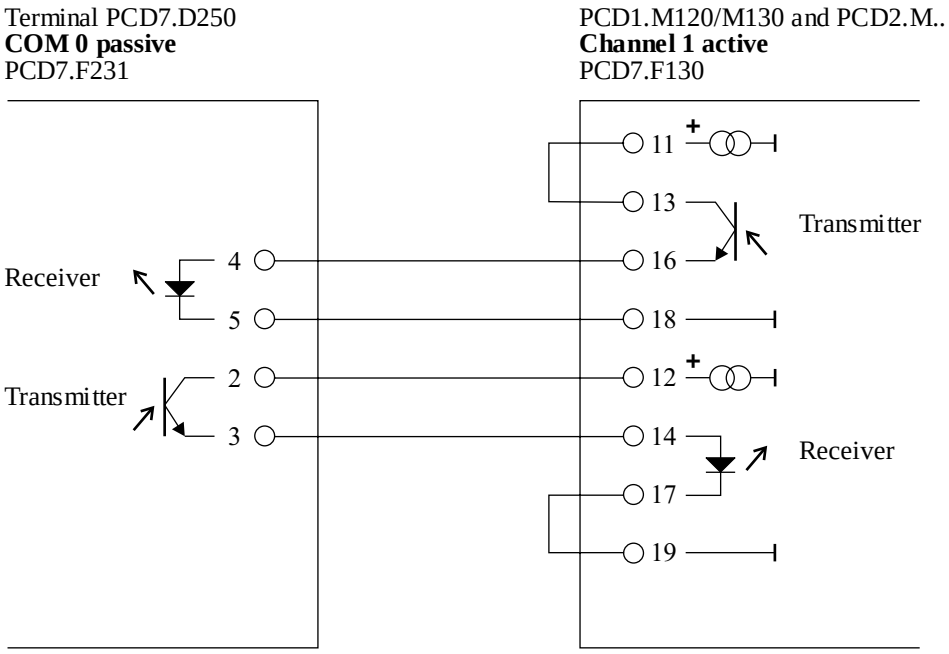

Communications mode MC2 (XON/XOFF), up to 9600 Baud.

5. Operation

5.1 Power-up tests

When the supply voltage is connected the ..D250 carries out a self-test. During this process the following is displayed:

```
SAIA-BURGESS ELECTRONICS, CH-3280 MURTEN
------------> POWER-UP TEST <-----------
PCD7.D250                            XXX
                            HARDWARE  XXX
```

The power-up tests takes about 3 seconds. The user program should not send commands to the ..D250 during this period, because they will be ignored. The user program can use the “POLL” command, described in section 6.5, to determine when the ..D250 is ready to accept commands.

The self-test is divided into 6 sections, indicated by LEDs:

```
SAIA-BURGESS ELECTRONICS, CH-3280 MURTEN
------------> POWER-UP TEST <-----------
PCD7.D250                            XXX
                            HARDWARE  XXX
```

LCD initializing

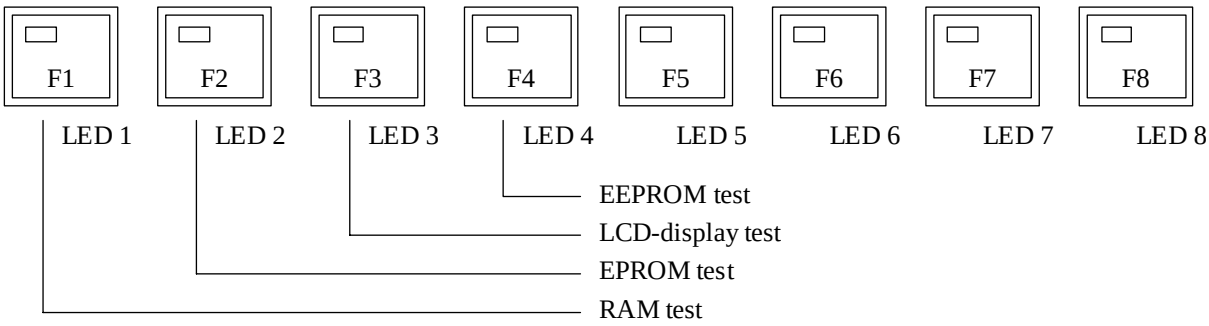

Prior to the individual tests, the microprocessor is tested. This is signalled by all LEDs lighting up briefly.

If all LEDs remain permanently lit, it means that the microprocessor cannot run or is faulty.

5.2 The keyboard

The ..D250 has a membrane keyboard which is compatible with the ..D202 terminal's keyboard.

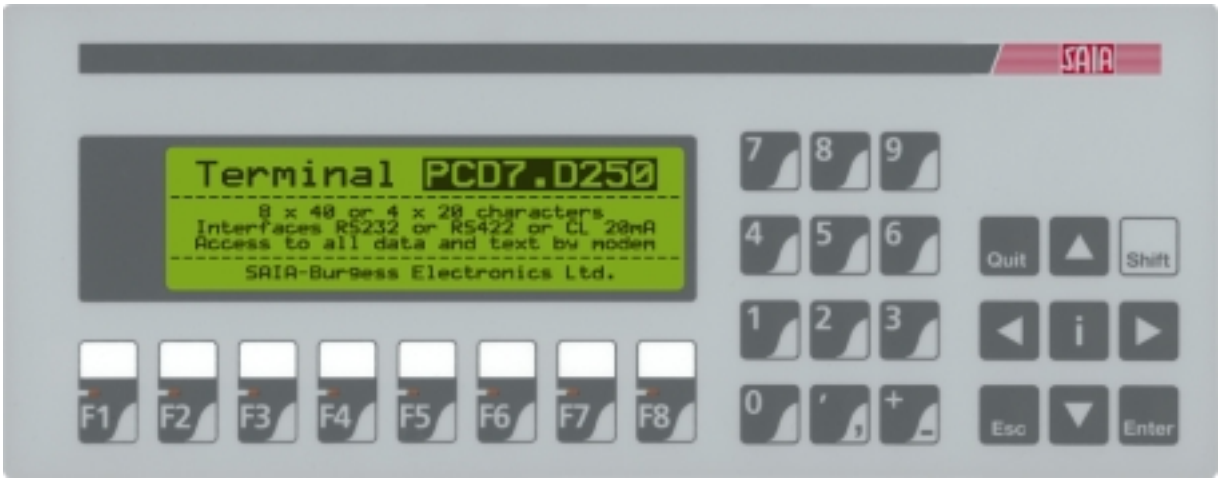

Returned key codes are:

Key	Dec.	Hex	ASCII	Notes
F1	65	41	'A'	
F2	66	42	'B'	
F3	67	43	'C'	
F4	68	44	'D'	
F5	69	45	'E'	
F6	70	46	'F'	
F7	71	47	'G'	
F8	72	48	'H'	
0	48	30	'0'	
1	49	31	'1'	
2	50	32	'2'	
3	51	33	'3'	
4	52	34	'4'	
5	53	35	'5'	
6	54	36	'6'	
7	55	37	'7'	
8	56	38	'8'	
9	57	39	'9'	
+	43	2B	'+'	
-	45	2D	'–'	Shift + '+'
.	46	2E	'.'	
,	44	2C	','	Shift + '.'

Key	Dec.	Hex	ASCII	Notes
i	105	69	'i'	Information
Quit	113	71	'q'	Quit
Shift	-	-	-	No code returned
Esc	27	1B	ESC	Escape
Enter	13	0D	CR	Carriage return
↑	11	0B	VT	Up arrow
↓	5	05	ENQ	Down arrow
←	8	08	BS	Left arrow
→	6	06	ACK	Right arrow
Shift + F1	119	77	'w'	Shifted states of function keys
Shift + F2	120	78	'x'	
Shift + F3	121	79	'y'	
Shift + F4	122	7A	'z'	
Shift + F5	115	73	's'	
Shift + F6	116	74	't'	
Shift + F7	117	75	'u'	
Shift + F8	118	76	'v'	
Shift + 0	97	61	'a'	Shifted states of numeric keys generate lower case letters from ASCII table
Shift + 1	98	62	'b'	
Shift + 2	99	63	'c'	
Shift + 3	100	64	'd'	
Shift + 4	101	65	'e'	
Shift + 5	102	66	'f'	
Shift + 6	103	67	'g'	
Shift + 7	104	68	'h'	
Shift + 8	106	6A	'j'	
Shift + 9	107	6B	'k'	
Shift + i	–	–	–	Enters "Setup/Test mode", no code is output
Shift + Quit to Shift + →				Same codes as without Shift

5.3 Setup / Test mode

This mode is entered by pressing **Shift + i** on the ..D250 keyboard. Setup/Test mode can be entered when the ..D250 on or off line, all data received from the host is ignored until the mode is exited. During Setup/Test mode the green no. 8 LED flashes.

Pressing the up or down arrow key steps through the Setup/Test mode menu:

Setup mode	Configures the ..D250
Default setup	Restores factory default setup
Demo display	Demonstration display
Hardware tests	Runs hardware tests
Display test	Tests the LCD display
Keybord test	Tests the keyboard
LED test	Tests the LEDs

Once the desired menu item is selected, pressing **"Enter",** the chosen setup parameters will be loaded permanently into the EEPROM, or the corresponding test executed. To exit Setup/Test mode, press **"Quit"** or **"Esc"**.

During Setup/Test mode no. 8 LED flashes.

Note: If the host computer is sending data to the ..D250 when the operator enters Setup/Test mode, omission of handshaking brings a risk of data loss or modification.

5.3.1 Setup mode

This displays and configures the setup data in the non-volatile EEPROM. The first screen shows a help text:

```
SETUP MODE
↑or↓ scrolls menu
←or→ changes data
Ent accepts, Esc aborts
```

Pressing any key displays the first item in the menu:

```
SETUP MODE

Baudrate:
9600
```

Pressing the up or down arrow key steps through the menu of configurable items. Press the left or right arrow key to change the selected item's setting.

Baudrate	110, 150, 300, 600, 1200, 2400, 4800, [9600], 19200
Data bits	[8], 7
Parity	[Even], Odd, None, Low
Stop bits	[1], 2
Handshaking	[None], RTS/CTS, XON/XOFF
Echo key to display	[No], Yes
Page/scroll mode	[Page], Scroll
Auto line feed	[No], Yes
Key auto-repeat	[No], All keys, All keys 2 speed, Arrow keys, Arrow keys 2 speed.
Character set	[CodePage 437], D100 compatible
Backlight	[On], Off
Contrast	0...15 [7]
Display mode	[8 x 40], 4 x 20
Serial port	[COM 1 (RS 232)], COM 0 (PCD7.F2..)

[ ] Factory default settings are shown in square brackets, as they are stored in the system EPROM. Each item is described in detail below.

Once all settings are correct, press **"Enter"** to store the data to the non-volatile EEPROM memory. To abort, discarding any changes, press **"Quit"** or **"Esc"**.

All features except the baudrate, data bits, parity, stop bits and hand-shaking can also be controlled from the host computer by sending an escape sequence to the ..D250. These are described in section 6.1.

Communication parameter

These settings define the communications protocol (Baudrate, Data bits, Parity and Stop bits):

- 1 Startbit
- 7 or 8 Data bits
- 1 Parity bit (or none)
- 1 or 2 Stop bits

If “High” parity is required, this can be simulated by setting the parity to “None” and using 2 stop bits. This is the same as high parity and one stop bit.

Handshaking [None]

“Handshaking” refers to the signalling between the host computer and the ..D250 which indicates when the unit is ready to receive and process data on the serial line. Normally handshaking is not required because the ..D250 can process incoming data very fast and also has a 512 character receive buffer.

The high baudrate 19 200 bit/s or communications via the 20 mA current loop interface always requires a handshaking (either RTS/CTS or XON/XOFF).

RTS/CTS: This handshaking uses the RTS (Request To Send) and CTS (Clear To Send) lines for the handshaking. If “None” is selected, pins 8 and 7 (RTS/CTS) on the terminal must be shorted out (see section 4.3.2) and SAIA® PCD is assigned in mode MC1.

XON/XOFF: This handshaking uses software characters to disable (XOFF) and enable (XON) transmission. Pins 7 and 8 of the terminal plug must be connected together and SAIA® PCD is assigned in mode MC2.

Echo (Echo key to display) [No]

When a key is pressed in “Echo = Yes” mode, the character is automatically written to the display at the current cursor position, and it is also transmitted to the host. If this is required, however, it is advisable to generate the echo in the PCD with MC3 mode. This gives the PCD a chance to check the validity of characters in advance.

Page/scroll mode [Page]

Page mode : The cursor moves from the last line to the first line when the ..D250 receives a line feed character. The display is not altered.

Scroll mode: If the cursor is on the last line when a line feed is received, then the display scrolls up one line and the cursor remains on the last line, which is now blank, in the same column. If the line feed was caused by a carriage return character, with “auto line feed” set to “Yes”, then the cursor is also moved to the start of the line.

Auto line feed [No]

When the ..D250 receives a carriage return character (13 decimal, 0DH), it moves the cursor to the start of the current line. If “auto line feed” is set to “Yes”, then the cursor also moves to the next line down automatically.

Key auto-repeat [No]

Keys can be made to repeat at a rate of 8 per second if the key is held depressed for more than 0.7 seconds. The auto-repeat feature has these settings:

No	No keys repeat (default)
All keys	All keys repeat
All keys „2 speed“	All keys repeat, with 2-speed signalling, see below
Arrow keys	Only the arrow keys repeat
Arrow keys „2 speed“	Only the arrow keys repeat, with 2 speed signalling, see below

“2 speed” signalling mode is for use by host programs that have stepping up/down controls, which are stepped by pressing up/down keys. With auto-repeat on, key codes are sent at a rate of 8 per second if the key is held down for 0.7 sec. The same occurs with the 2 speed feature, but after holding the key down for 3 seconds a special “start second speed” character (30 decimal) is sent to the host to indicate 2 speed mode, followed by more repeated key codes at the same 8-per-second rate. When the key is released an “end 2 speed” character (31 decimal) is sent to indicate that the key has been released. When the host’s program receives the up/down key code, it should increment/decrement the associated value. If the host receives a “start second speed” character it should step the value by two (or more) and also for each additional up/down key code received and stop when the “end 2 speed” character is received (or any character which is not the same repeated up/down key code).

For example, if “A” is pressed, with “All keys, 2 speed” auto-repeat, this is the sequence of events:

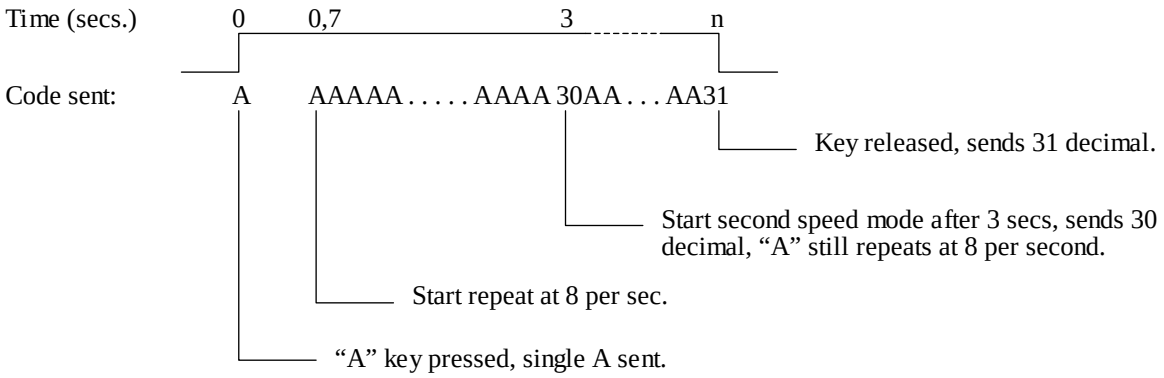

Character mode 8 x 40 (4 x 20 off) or 4 x 20 [8 x 40]

In Setup it is only possible to choose either 8 x 40 (default) or 4 x 20. Superposition of both modes is possible using the controller via the serial port (see section 6.2).

Character set [CodePage 437]

In 8 x 40 or 4 x 20 mode, two character sets each are available. Each set uses the same characters for 32 to 127 dec. There are differences in subsequent characters 128 to 255 dec. (see tables in Chapter 7).

Backlight [On]

The display’s LED backlight can be turned off if required. The backlight is normally always on, and is required to make the text visible. The backlight is usually only turned off and on (blinked) to provide a visual indication of an alarm etc. using escape sequences sent by the host (see section 6.3).

Contrast [7]

The contrast of the LCD display (it’s blackness) can be adjusted in 16 steps by selecting a value between 0 and 15. 0 is the lightest, 15 is the darkest.

Communications channel [COM1]

COM 1 has RS 232 as fixed equipment. Alternatively, COM 0 can be fitted with the PCD7.F2.. modules. It is not possible to run both channels simultaneously.

5.3.2 Default setup

This restores the factory default setup, and writes it into the non-volatile EEPROM. The factory default settings are as follows:

Baudrate	9600
Data bits	8
Parity	Even
Stop bits	1
Echo key to display	No
Handshaking	None
Page/scroll mode	Page
Auto line feed	No
Key auto-repeat	No
Character set	CodePage 437
Backlight	On
Contrast	7 (medium)
Display mode	8 x 40
Serial port	COM 1 (RS 232)

5.3.3 Demo display

This is for use when showing the ..D250 at an exhibition, when it is not connected to a host computer. The display shows some information about the unit. **Press Shift + F4 to exit**.

```
*** PCD7.D250 ***
INDUSTRIAL TERMINAL
 SAIA-BURGESS Ltd
  CH-3280 MURTEN
```

5.3.4 Hardware tests

This runs the power-up tests in a continuous loop, which can be used for detecting intermittent faults when the ..D250 is in the field. The tests run until an error occurs, which displays a text and the ..D250 is reset by the watchdog timer and the tests are repeated. The only way to exit the tests is to **power the ..D250 off and on.**

5.3.5 Display test

This is a comprehensive test of the LCD display, the character set and the LCD controller's internal RAM. **Press any key** to exit.

5.3.6 Keyboard test

The display reproduces individual keys on its left-hand side and below (arranged as on the keyboard). When a key is activated the relevant field turns black.

Press Shift + F4 to exit the keyboard test.

5.3.7 LED test

This test allows each separate LED to be checked individually. Each LED in sequence is turned on for 500 ms, and the display shows a "1" for the LED which should be on:

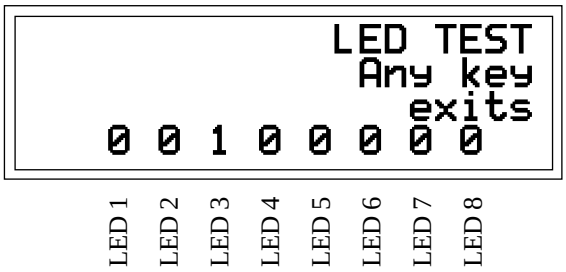

Press any key to end the test and return to Setup/Test mode.

6. Commands by the serial interface

Single control characters or two, three or four character “escape sequences” are transmitted to the ..D250 using the PCD’s STXT (send text) or STXD (transmit character) instructions.

Important note:

Some escape sequences use the ‘@’ character. If using a SAIA® PCD port running in MODE C, the PCD interprets an ‘@’ character as the start of an indirect addressing control string.

So when using MODE C, enter each ‘@’ character as ‘@@’, so the PCD interprets it as a single ‘@’ character.

6.1 Configuration

The configuration of the ..D250 can be modified by sending a series of special commands. The configuration remains active until the ..D250 is powered off and on, whereupon the configuration defined from “setup mode” is restored.

All required commands can be included in a single PCD Text and transmitted to the ..D250 in one go.

Echo key to display

See section 5.3.1 for details.

Command	ASCII	Decimal	Hex
Echo off	ESC @ 0	27 64 48	1B 40 30
Echo on	ESC @ 1	27 64 49	1B 40 31

Page/scroll mode

See section 5.3.1 for details.

Command	ASCII	Decimal	Hex
Scroll mode	ESC @ 4	27 64 52	1B 40 34
Page mode	ESC @ 5	27 64 53	1B 40 35

Auto line feed after carriage return

See section 5.3.1 for details.

Command	ASCII	Decimal	Hex
Auto line feed on	ESC @ 2	27 64 50	1B 40 32
Auto line feed off	ESC @ 3	27 64 51	1B 40 33

Key auto-repeat

See section 5.3.1 for details

Command	ASCII	Decimal	Hex
Auto-repeat off	ESC A	27 65	1B 41
Auto-repeat on			
• all keys	ESC B	27 66	1B 42
• arrow keys only	ESC C	27 67	1B 43
• all keys „2 speed“	ESC D	27 68	1B 44
• arrow keys „2 speed“	ESC E	27 69	1B 45

Character modes

The default selection is 8 x 40 mode. With the control command indicated, it is possible to switch to 4 x 20. However, this opens a new screen page.

Both screen pages still remain stored in the terminal in both modes. They can be displayed in superposition with the “Transparent mode on” command (see example).

Command	ASCII	Decimal	Hex
Select mode 8 x 40 (default)	ESC @ M0	27 64 77 48	1B 40 4D 30
Select mode 4 x 20	ESC @ M1	27 64 77 49	1B 40 4D 31

Character set

Two character sets are available, as described in section 7.

Command	ASCII	Decimal	Hex
CodePage 437 (default)	ESC @ J	27 64 74	1B 40 4A
D100 compatible	ESC @ F	27 64 70	1B 40 46

Transparent mode

This mode allows two different screen pages to be displayed in superposition. It allows small (8 x 40) and large characters (4 x 20) to be represented on the same display.

```
4 x 20 characters
      8 x 40 characters
```

Command	ASCII	Decimal	Hex
Transparent mode off	ESC @ M4	27 64 77 52	1B 40 4D 34
Transparent mode on	ESC @ M5	27 64 77 53	1B 40 4D 35

For inverse representation, see section 6.3

Backlight and contrast

See section 6.3 for details.

6.2 Cursor control

Cursor up/down/left/right

The cursor can be moved one place up, down, left or right with a single-character command. If the cursor is moved off the display, it wraps around automatically.

Command	ASCII	Decimal	Hex
Cursor up	CTRL+K	11	0B
Cursor down	CTRL+E	5	05
Cursor left	CTRL+H	8	08
Cursor right	CTRL+F	6	06

Cursor positioning

Apart from the cursor address code (16 dec. or 10H), this function also requires X and Y addresses to position the cursor. Add an offset of 32 dec. or 20H to both addresses. If either of the addresses is incorrect, the cursor is not moved. The address ranges for modes 8 x 40 and 4 x 20 are correspondingly different:

Code X / Y Code		<32>	<33>	<34>	<35>	<36>	<37>	<38>	<39>	<40>	<41>	<42>	<43>	<44>	<45>	<46>	<47>	<48>	<49>	<50>	<51>	<52>	<53>	<54>	<55>	<56>	...	<70>	<71>
		1	2	3	4	5	6	7	8	9	10	11	12	13	14	15	16	17	18	19	20	21	22	23	24	25	...	39	40
<32>	1	X																									...		
<33>	2				X																						...		
<34>	3																										...		
<35>	4																X										...		
<36>	5																										...		
<37>	6																										...	X	
<38>	7																										...		
<39>	8																										...		

Mode 4 x 20

Mode 8 x 40

Example (sequence: **16 dec., Code X, Code Y**):

Cursor position	Decimal command	Hex command
Column 1, Line 1	16 32 32	10 20 20
Column 4, Line 2	16 35 33	10 23 21
Column 16, Line 4	16 47 35	10 2F 23
Column 39, Line 6	16 70 37	10 46 25

Note: To place the cursor in x-pos. 36 (equal ASCII $), please enter in each PCD text <36><36>.

```
Example:  TEXT xxxx  „... 16 36 36 34 ...“
                             x-pos y-pos
```

If both character sizes are used on the same display, their positioning is different. The following illustrations should help in finding the right position each time. (The positioning field for 4 x 20 characters is compatible with the ..D202.)

Positioning field for 8 x 40 characters

Y Code \ Code X		<32>	<33>	<34>	<35>	<36>	<37>	<38>	<39>	<40>	<41>	<42>	<43>	<44>	<45>	<46>	<47>	<48>	<49>	<50>	<51>	<52>	<53>	<54>	<55>	<56>	<57>	<58>	<59>	<60>	<61>	<62>	<63>	<64>	<65>	<66>	<67>	<68>	<69>	<70>	<71>
		1	2	3	4	5	6	7	8	9	10	11	12	13	14	15	16	17	18	19	20	21	22	23	24	25	26	27	28	29	30	31	32	33	34	35	36	37	38	39	40
<32>	1	X																																							
<33>	2				X																																				
<34>	3																																								
<35>	4																X																								
<36>	5																																								
<37>	6																																							X	
<38>	7																																								
<39>	8																																								

Positioning field for 4 x 20 characters

Y Code \ Code X		<32>	<33>	<34>	<35>	<36>	<37>	<38>	<39>	<40>	<41>	<42>	<43>	<44>	<45>	<46>	<47>	<48>	<49>	<50>	<51>
		1	2	3	4	5	6	7	8	9	10	11	12	13	14	15	16	17	18	19	20
<32>	1	X																			
<33>	2				X																
<34>	3																				
<35>	4																X				

Cursor home

This single-character command moves the cursor to the first column of the first line.

Command	ASCII	Decimal	Hex
Cursor home	CTRL+Z	26	1A

Cursor on/off

These two-character commands turn the cursor on and off.

Command	ASCII	Decimal	Hex
Cursor on	ESC W	27 87	1B 57
Cursor off	ESC T	27 84	1B 54

Line feed

Line feed moves the cursor down one line. If the cursor was on the last line, this scrolls the display if in scroll mode, or the cursor moves to the first line if in page mode. The column position is not changed.

Command	ASCII	Decimal	Hex
Line feed	LF	10	0A

Carriage return

Carriage return moves the cursor to the start of the current line. If “auto line feed after carriage return” is selected, a line feed is also done as described above.

Command	ASCII	Decimal	Hex
Carriage return	CR	13	0D

Delete character

Delete removes the character to the left of the cursor (changes it to a space), and moves the cursor left one place. If at the start of a line, the cursor is moved to the end of the preceding line. Delete stops at the home position.

Command	ASCII	Decimal	Hex
Delete (backspace)	DEL	127	7F

6.3 Display control

Clear display

Clear display sets all the characters on the display to spaces, and moves the cursor to the home position.

Command	ASCII	Decimal	Hex
Clear display	CTRL+L	12	0C

Save display/Restore display

Ten save/restore areas are provided, numbered 0 to 9. Restoring from a display area that was not previously saved will produce a blank screen with cursor on. The content of the stored areas is lost when the ..D250 is powered off.

Command	ASCII	Decimal	Hex
Save display ‘n’	ESC @ S n	27 64 83 n	1B 40 53 n
Restore display ‘n’	ESC @ R n	27 64 82 n	1B 40 52 n
for „n“ =	0...9	48..57	30...39

Backlight off/on

The backlight is normally always on, and is required to make the text visible. The backlight can be turned off and on (blinked) to provide a visual indication of an alarm etc.

Command	ASCII	Decimal	Hex
Backlight off	ESC O	27 79	1B 4F
Backlight on	ESC L	27 76	1B 4C

Display contrast

The contrast of the LCD display (it's blackness) can be adjusted by sending a hex contrast value between 0 and F, where 0 is lightest and F is darkest.

Command	ASCII	Decimal	Hex
High contrast	ESC @ D 0	27 64 68 48	1B 40 44 30
Medium contrast	ESC @ D 7	27 64 68 55	1B 40 44 37
Low contrast	ESC @ D F	27 64 68 70	1B 40 44 46

Inverted characters

The default is for characters to be represented in black against a light background. With the following commands, representation (in the current text) can be inverted and the inversion then cancelled again.

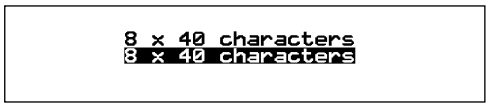

Further possibility:

Large characters (4 x 20) positive and inverted with small characters (8 x 40) superposed using the „Transparent mode“ command, see section 6.1 for details.

Command	ASCII	Decimal	Hex
Inversion on	ESC @ N 1	27 64 78 49	1B 40 4E 31
Inversion off	ESC @ N 0	27 64 78 48	1B 40 4E 30

Restriction ! If you are in transparent mode the command "Inverted characters" can not be used with the characters 8 x 40.

6.4 LED control

The ..D250 has 8 LEDs, numbered 1 to 8, which can be used as general-purpose indicators. Each can be turned on and off by a four character escape sequence.

A lower case letter ‘a’ to ‘h’ is used to select LED 1 to 8
(‘a’ = LED 1, ‘h’ = LED 8).

To turn on the LED use ‘1’, to turn it off use ‘0’.

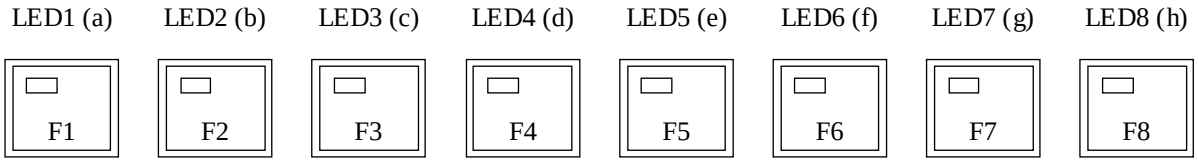

Command	ASCII	Decimal	Hex
Turn on LED 1	ESC @ a 1	27 64 97 49	1B 40 61 31
Turn off LED 1	ESC @ a 0	27 64 97 48	1B 40 61 30
Turn on LED 2	ESC @ b 1	27 64 98 49	1B 40 62 31
Turn off LED 2	ESC @ b 0	27 64 98 48	1B 40 62 30
Turn on LED 3	ESC @ c 1	27 64 99 49	1B 40 63 31
Turn off LED 3	ESC @ c 0	27 64 99 48	1B 40 63 30
Turn on LED 4	ESC @ d 1	27 64 100 49	1B 40 64 31
Turn off LED 4	ESC @ d 0	27 64 100 48	1B 40 64 30
Turn on LED 5	ESC @ e 1	27 64 101 49	1B 40 65 31
Turn off LED 5	ESC @ e 0	27 64 101 48	1B 40 65 30
Turn on LED 6	ESC @ f 1	27 64 102 49	1B 40 66 31
Turn off LED 6	ESC @ f 0	27 64 102 48	1B 40 66 30
Turn on LED 7	ESC @ g 1	27 64 103 49	1B 40 67 31
Turn off LED 7	ESC @ g 0	27 64 103 48	1B 40 67 30
Turn on LED 8	ESC @ h 1	27 64 104 49	1B 40 68 31
Turn off LED 8	ESC @ h 0	27 64 104 48	1B 40 68 30

6.5 Miscellaneous commands

Lock keyboard/Unlock keyboard

These commands enable or disable the keyboard. When locked, all key depressions are ignored.

Command	ASCII	Decimal	Hex
Lock keyboard	ESC N	27 78	1B 4E
Unlock keyboard	ESC Q	27 81	1B 51

Restart warm/Restart cold

“Restart warm” resets the ..D250 and restores the customer setup. It is the same as a power-up reset.

“Restart cold” initializes the setup to the factory defaults listed in section 5.3.2.

Command	ASCII	Decimal	Hex
Restart warm	ESC H	27 72	1B 48
Restart cold	ESC @ G	27 64 71	1B 40 47

Disable and Enable Setup/Test mode

Once the ..D250 has been configured, you may want to prevent unautorized users changing the setup. This can be done with the escape sequence below, which disables or enables the Shift + i key combination.

If disabled, Shift + i is also restored by powering the ..D250 off and on, or by sending a “Restart” command.

Command	ASCII	Decimal	Hex
Disable Setup/Test	ESC @ H	27 64 72	1B 40 48
Enable Setup/Test	ESC @ I	27 64 73	1B 40 49

Demonstration display and hardware tests

These commands execute the tests described in sections 5.3.3 to 5.3.7. The “POLL” command can be used determine when test has been completed.

Command	ASCII	Decimal	Hex
Demonstration display	ESC J	27 74	1B 4A
Display test	ESC @ A	27 64 65	1B 40 41
Keyboard test	ESC @ 9	27 64 57	1B 40 39
LED test	ESC @ L	27 64 76	1B 40 4C
Hardware tests	ESC @ C	27 64 67	1B 40 43

POLL

To determine if the ..D250 is connected and is ready to receive commands, the “poll” message can be sent. If the ..D250 is ready, it returns an “**SOH**” response character (1 decimal, 01H). If not ready there will be no response. This is typically used to determine when the ..D250 has finished its power-up tests.

The poll command is the only command which has a response. It can also be used to check that the ..D250 is still operational. If it fails, the user program could take the necessary action to alert the operator that the ..D250 terminal is not responding.

Command	ASCII	Decimal	Hex
POLL	ESC @ B	27 64 66	1B 40 42
Reply from ..D250 if operational	SOH	1	01

6.6 Command Summary

Command	ASCII	Decimal	Hex
Configuration:			
Echo off	ESC @ 0	27 64 48	1B 40 30
Echo on	ESC @ 1	27 64 49	1B 40 31
Auto line feed on	ESC @ 2	27 64 50	1B 40 32
Auto line feed off	ESC @ 3	27 64 51	1B 40 33
Scroll mode	ESC @ 4	27 64 52	1B 40 34
Page mode	ESC @ 5	27 64 53	1B 40 35
Select mode 8 x 40	ESC @ M0	27 64 77 48	1B 40 4D 30
Select mode 4 x 20	ESC @ M1	27 64 77 49	1B 40 4D 31
Transparent mode off	ESC @ M4	27 64 77 52	1B 40 4D 34
Transparent mode on	ESC @ M5	27 64 77 53	1B 40 4D 35
CodePage 437	ESC @ J	27 64 74	1B 40 4A
D100 compatible	ESC @ F	27 64 70	1B 40 46
Auto-repeat off	ESC A	27 65	1B 41
Auto-repeat on:			
• all keys	ESC B	27 66	1B 42
• arrow keys only	ESC C	27 67	1B 43
• all keys, “2 speed”	ESC D	27 68	1B 44
• arrow keys, “2 speed”	ESC E	27 69	1B 45
Cursor control:			
Cursor up	CTRL+K	11	0B
Cursor down	CTRL+E	5	05
Cursor left	CTRL+H	8	08
Cursor right	CTRL+F	6	06
Cursor home	CTRL+Z	26	1A
Cursor on	ESC W	27 87	1B 57
Cursor off	ESC T	27 84	1B 54
Line feed	LF	10	0A
Carriage return	CR	13	0D
Delete (backspace)	DEL	127	7F
Cursor positioning	ASCII	CTRL+P ' '+X ' '+Y	
	Decimal	16 32+X 32+Y	
	Hex	10 20+X 20+Y	

Note : To output the character ‘@’, please enter in each PCD text ‘@@’ !

Command	ASCII	Decimal	Hex
Display control:			
Clear display	CTRL+L	12	0C
Save display ‘n’	ESC @ S n	27 64 83 n	1B 40 53 n
Restore display ‘n’	ESC @ R n	27 64 82 n	1B 40 52 n
Backlight off	ESC O	27 79	1B 4F
Backlight on	ESC L	27 76	1B 4C
High contrast	ESC @ D 0	27 64 68 48	1B 40 44 30
Medium contrast	ESC @ D 7	27 64 68 55	1B 40 44 37
Low contrast	ESC @ D F	27 64 68 70	1B 40 44 46
Inversion on	ESC @ N 1	27 64 78 49	1B 40 4E 31
Inversion off	ESC @ N 0	27 64 78 48	1B 40 4E 30
LED control:			
Turn on LED 1	ESC @ a 1	27 64 97 49	1B 40 61 31
Turn off LED 1	ESC @ a 0	27 64 97 48	1B 40 61 30
(for all other LEDs:	'b'=2, 'c'=3, 'd'=4, 'e'=5, 'f'=6, 'g'=7, 'h'=8)		
Miscellaneous commands:			
Lock keyboard	ESC N	27 78	1B 4E
Unlock keyboard	ESC Q	27 81	1B 51
Restart warm	ESC H	27 72	1B 48
Restart cold	ESC @ G	27 64 71	1B 40 47
Disable Setup/Test	ESC @ H	27 64 72	1B 40 48
Enable Setup/Test	ESC @ I	27 64 73	1B 40 49
Demonstration display	ESC J	27 74	1B 4A
Display test	ESC @ A	27 64 65	1B 40 41
Keyboard test	ESC @ 9	27 64 57	1B 40 39
LED test	ESC @ L	27 64 76	1B 40 4C
Hardware tests	ESC @ C	27 64 67	1B 40 43
POLL	ESC @ B	27 64 66	1B 40 42
..D250 responds with	SOH	1	10

Note : To output the character ‘@’, please enter in each PCD text ‘@@’ !

7. Character sets

To guarantee compatibility with earlier terminal programs, the ..D250 also takes account of compatibility with the ..D100 character set.

7.1 First ASCII-table (32...127 decimal, 20…7F hexa)

The characters 20...7F hex (32...127 decimal) are the same for both character sets:

Dec	Hex	ASC	Dec	Hex	ASC	Dec	Hex	ASC	Dec	Hex	ASC	Dec	Hex	ASC	Dec	Hex	ASC
32	20	SP	48	30	0	64	40	@	80	50	P	96	60	`	112	70	p
33	21	!	49	31	1	65	41	A	81	51	Q	97	61	a	113	71	q
34	22	"	50	32	2	66	42	B	82	52	R	98	62	b	114	72	r
35	23	#	51	33	3	67	43	C	83	53	S	99	63	c	115	73	s
36	24	$	52	34	4	68	44	D	84	54	T	100	64	d	116	74	t
37	25	%	53	35	5	69	45	E	85	55	U	101	65	e	117	75	u
38	26	&	54	36	6	70	46	F	86	56	V	102	66	f	118	76	v
39	27	'	55	37	7	71	47	G	87	57	W	103	67	g	119	77	w
40	28	(	56	38	8	72	48	H	88	58	X	104	68	h	120	78	x
41	29	)	57	39	9	73	49	I	89	59	Y	105	69	i	121	79	y
42	2A	*	58	3A	:	74	4A	J	90	5A	Z	106	6A	j	122	7A	z
43	2B	+	59	3B	;	75	4B	K	91	5B	[	107	6B	k	123	7B	{
44	2C	,	60	3C	<	76	4C	L	92	5C	\	108	6C	l	124	7C	|
45	2D	-	61	3D	=	77	4D	M	93	5D	]	109	6D	m	125	7D	}
46	2E	.	62	3E	>	78	4E	N	94	5E	^	110	6E	n	126	7E	→
47	2F	/	63	3F	?	79	4F	O	95	5F	_	111	6F	o	127	7F	DEL

7.2 Extended ASCII-table (128...255 decimal, 80…FF hexa)

For the extended ASCII table, 2 character sets are available:

- “CodePage 437”, the universal character set containing all language-dependent characters
- “D100-compatible”, which is compatible with the earlier ..D100 terminal.

Note : The displayed character shapes in the extended ASCII characters may not be exactly as shown due to differences between the ..D250 and IBM PC character shapes.

7.2.1 CodePage 437 (default)

This universal character set contains all the language-dependent characters defined for the small terminals ..D160/..D170 and ..D202 under “German”, “English”, “French” and “Scandinavian”.

Dec	Hex	ASC	Dec	Hex	ASC	Dec	Hex	ASC	Dec	Hex	ASC
128	80	Ç	144	90	É	160	A0	á	176	B0	░
129	81	ü	145	91	æ	161	A1	í	177	B1	▒
130	82	é	146	92	Æ	162	A2	ó	178	B2	▓
131	83	â	147	93	ô	163	A3	ú	179	B3	│
132	84	ä	148	94	ö	164	A4	ñ	180	B4	┤
133	85	à	149	95	ò	165	A5	Ñ	181	B5	╡
134	86	å	150	96	û	166	A6	ª	182	B6	╢
135	87	ç	151	97	ù	167	A7	º	183	B7	╖
136	88	ê	152	98	ÿ	168	A8	¿	184	B8	╕
137	89	ë	153	99	Ö	169	A9	←	185	B9	╣
138	8A	è	154	9A	Ü	170	AA	→	186	BA	║
139	8B	ï	155	9B	¢	171	AB	½	187	BB	╗
140	8C	î	156	9C	£	172	AC	¼	188	BC	╝
141	8D	ì	157	9D	¥	173	AD	¡	189	BD	╜
142	8E	Ä	158	9E	Pts	174	AE	«	190	BE	╛
143	8F	Å	159	9F	ƒ	175	AF	»	191	BF	┐

Dec	Hex	ASC	Dec	Hex	ASC	Dec	Hex	ASC	Dec	Hex	ASC
192	C0	└	208	D0	╨	224	E0	α	240	F0	≡
193	C1	┴	209	D1	╤	225	E1	ß	241	F1	±
194	C2	┬	210	D2	╥	226	E2	Γ	242	F2	≥
195	C3	├	211	D3	╙	227	E3	π	243	F3	≤
196	C4	─	212	D4	╘	228	E4	Σ	244	F4	⌠
197	C5	┼	213	D5	╒	229	E5	σ	245	F5	⌡
198	C6	╞	214	D6	╓	230	E6	µ	246	F6	÷
199	C7	╟	215	D7	╫	231	E7	τ	247	F7	≈
200	C8	╚	216	D8	╪	232	E8	Φ	248	F8	°
201	C9	╔	217	D9	┘	233	E9	Θ	249	F9	∙
202	CA	╩	218	DA	┌	234	EA	Ω	250	FA	·
203	CB	╦	219	DB	█	235	EB	δ	251	FB	√
204	CC	╠	220	DC	▄	236	EC	∞	252	FC	ⁿ
205	CD	═	221	DD	▌	237	ED	φ	253	FD	²
206	CE	╬	222	DE	▐	238	EE	ε	254	FE	■
207	CF	╧	223	DF	▀	239	EF	∩	255	FF	

CodePage 437

Characters represented on the display in 4 x 20 characters mode.

32	48	64	80	96	112	128	144	160	176	192	208	224	240	Dec
	0	@	P	`	p	Ç	É	á	▒	└	╨	α	≡	
!	1	A	Q	a	q	ü	æ	í	▓	┴	╤	β	±	
"	2	B	R	b	r	é	Æ	ó	│	├	╥	Γ	≥	
#	3	C	S	c	s	â	ô	ú	┤	┼	╙	π	≤	
$	4	D	T	d	t	ä	ö	ñ	╡	─	╘	Σ	⌠	
%	5	E	U	e	u	à	ò	Ñ	╢	╞	╒	σ	⌡	
&	6	F	V	f	v	å	û	ª	╖	╟	╓	µ	÷	
'	7	G	W	g	w	ç	ù	º	╕	╠	╫	τ	≈	
(	8	H	X	h	x	ê	ÿ	¿	╣	╚	╪	Φ	°	
)	9	I	Y	i	y	ë	Ö	⌐	╗	╔	┘	Θ	∙	
*	:	J	Z	j	z	è	Ü	¬	╝	╩	┌	Ω	·	
+	;	K	[	k	{	ï	¢	½	╜	╦	█	δ	√	
,	<	L	\	l	|	î	£	¼	╛	╠	▄	∞	ⁿ	
-	=	M	]	m	}	ì	¥	¡	╞	═	▌	φ	²	
.	>	N	^	n	→	Ä	₧	«	╟	╬	▐	ε	■	
/	?	O	_	o	←	Å	ƒ	»	╢	╧	▀	∩		
47	63	79	95	111	127	143	159	175	191	207	223	239	255	Dec

7.2.2 D100 compatible

Dec	Hex	ASC	Dec	Hex	ASC	Dec	Hex	ASC	Dec	Hex	ASC
128	80		144	90		160	A0		176	B0	
129	81		145	91		161	A1	□	177	B1	
130	82		146	92		162	A2		178	B2	
131	83		147	93		163	A3		179	B3	
132	84		148	94		164	A4		180	B4	
133	85		149	95		165	A5		181	B5	
134	86		150	96		166	A6		182	B6	
135	87		151	97		167	A7		183	B7	
136	88		152	98		168	A8		184	B8	
137	89		153	99		169	A9		185	B9	
138	8A		154	9A		170	AA		186	BA	
139	8B		155	9B		171	AB		187	BB	
140	8C		156	9C		172	AC		188	BC	
141	8D		157	9D		173	AD		189	BD	
142	8E		158	9E		174	AE	Σ	190	BE	
143	8F		159	9F		175	AF		191	BF	

Dec	Hex	ASC	Dec	Hex	ASC	Dec	Hex	ASC	Dec	Hex	ASC
192	C0		208	D0		224	E0	α	240	F0	
193	C1		209	D1		225	E1	ä	241	F1	
194	C2		210	D2		226	E2	ß	242	F2	
195	C3		211	D3		227	E3		243	F3	
196	C4	Ä	212	D4		228	E4	ä	244	F4	Ω
197	C5	Å	213	D5		229	E5	å	245	F5	
198	C6	Æ	214	D6	Ö	230	E6	æ	246	F6	ö
199	C7		215	D7		231	E7		247	F7	π
200	C8		216	D8	Ø	232	E8		248	F8	Ø
201	C9		217	D9		233	E9		249	F9	
202	CA		218	DA		234	EA		250	FA	
203	CB		219	DB	□	235	EB	x	251	FB	
204	CC		220	DC	Ü	236	EC	Φ	252	FC	ü
205	CD		221	DD		237	ED		253	FD	
206	CE		222	DE		238	EE		254	FE	
207	CF		223	DF	□	239	EF	Ö	255	FF	▉

8. User program examples for the PCD

8.1 Hardware configuration

The following examples are based on the hardware installation illustrated below:

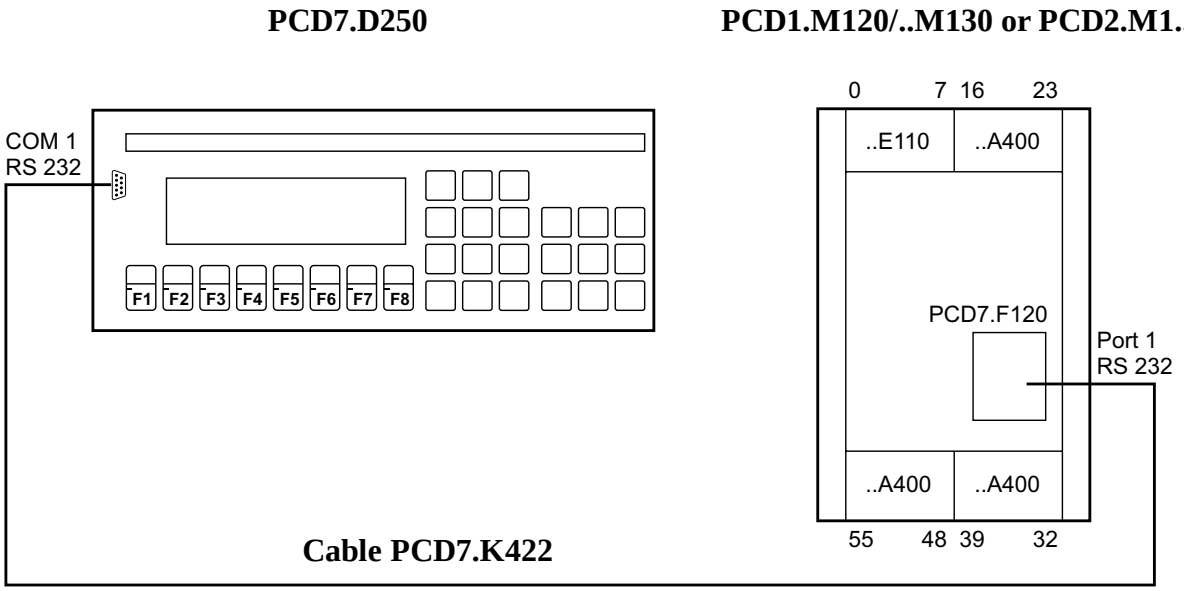

Serial channel 1	:	RS 232 (PCD7.F120)
Cable (PCD7.K422)	:	wired for mode MC 0 (without RTS/CTS)
Setup on ..D250 (EPROM)	:	„Default Setup“ configuration (see part 5.3.2)

Instructions:

- Diagnostic flags are used for the control and diagnosis of serial data transmission. As a simple way of making them visible, outputs are used in the examples. It is therefore important that the three ..A400 (or ..A410) output modules shown on the diagram are present at the appropriate places.

- For the simultaneous transmission of several screen pages it is advisable to work with RTS/CTS (MC1) or XON/XOFF (MC2). This precludes any possible overflow of the terminal’s input buffer. Please note that this must also be defined in the terminal setup.

8.2 Single text transmission

A simple text is to be output in large characters (4 x 20) by closing the switch connected to input 0 and a text in small characters by closing input 1.

- 8.2.1 The user program is structured in BLOCTEC.
- 8.2.2 The user program is structured in GRAFTEC.
- 8.2.3 Closing input 0 should output a combined text in large and small characters.

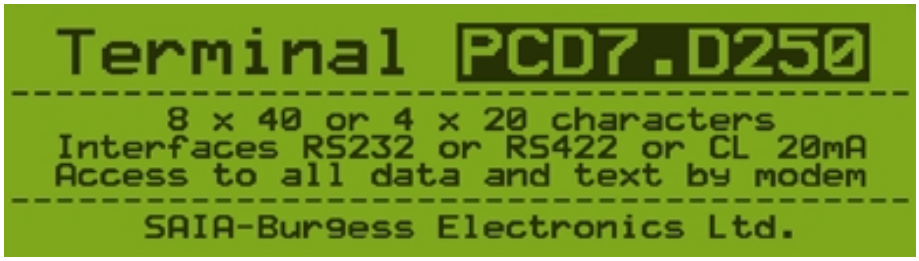

8.2.1 Single text transmission in BLOCTEC

```
;+-------------------------------------------------------------------+
;|                                                                   |
;|  User program example 8.2.1 for the industrial terminal PCD7.D250 |
;|  ================================================================|
;|  The program is structured in BLOCTEC                             |
;|                                                                   |
;|  File:       NDEMO21.SRC                                          |
;|                                                                   |
;|  Creation:   16.01.97        U.Jäggi                              |
;|  Modified:   03.02.00        C. Bruegger                          |
;|                                                                   |
;+-------------------------------------------------------------------+


TEXT    1       "<12>"                      ; Clear display
                "<27><64><77><49>"          ; Display mode:4 x 20
                "<27><84>"                  ; Cursor off
                "     INDUSTRIAL     "
                "  CONTROL-TERMINAL  "
                "     PCD7.D250      "
                "Display mode:4 x 20 "

TEXT    10      "<12>"                      ; Clear display
                "<27><64><77><48>"          ; Display mode:8 x 40
                "<27><84>"                  ; Cursor off
                "<10>"                      ; LF
                "########################################"
                "#              INDUSTRIAL              #"
                "#           CONTROL-TERMINAL           #"
                "#              PCD7.D250               #"
                "#         Display mode:8 x 40          #"
                "########################################"


TEXT    100     "UART:9600,8,E,1;MODE:MC0;DIAG:O16,R100"

;_____________________________________________________________________.
```

```
                                        ;--------------------------------
                                        ; Coldstart
                                        ;--------------------------------
            XOB     16
            SASI    1                   ; Assignation RS232 interface n°1
                    100                 ; Text 100
            EXOB

;                                                                       .

                                        ;--------------------------------
                                        ; Mainprogram
                                        ;--------------------------------
            COB     0
                    0
            STH     I       0           ; for display 4 x 20
            DYN     F       0
            ANL     O       22          ; Text busy flag
            CPB     H       0           ; Send text
            STH     I       1           ; for display 8 x 40
            DYN     F       1
            ANL     O       22          ; Text busy flag
            CPB     H       1           ; Send text

            ECOB
;=======================================================================

            PB      0                   ; Send text
            STXT    1                   ; Interface 1
                    1                   ; Text 1
            EPB

            PB      1                   ; Send text
            STXT    1                   ; Interface 1
                    10                  ; Text 10

            EPB

;                                                                       .
```

8.2.2 Single text transmission in GRAFTEC

```
;+-------------------------------------------------------------------+
;|                                                                   |
;|  User program example 8.2.2 for the industrial terminal PCD7.D250 |
;|  ================================================================ |
;|  The program is structured in GRAFTEC                             |
;|                                                                   |
;|  File:       NDEMO22.SRC                                          |
;|                                                                   |
;|  Creation:   29.01.97        U.Jäggi                              |
;|  Modified:   03.02.00        C. Bruegger                          |
;|                                                                   |
;+-------------------------------------------------------------------+


TEXT    1       "<12>"                  ; Clear display
                "<27><64><77><49>"      ; Display mode:4 x 20
                "<27><84>"              ; Cursor off
                "     INDUSTRIAL     "
                "  CONTROL-TERMINAL  "
                "     PCD7.D250      "
                "Display mode:4 x 20 "

TEXT    10      "<12>"                  ; Clear display
                "<27><64><77><48>"      ; Display mode:8 x 40
                "<27><84>"              ; Cursor off
                "<10>"                  ; LF
                "########################################"
                "#              INDUSTRIAL              #"
                "#           CONTROL-TERMINAL           #"
                "#              PCD7.D250               #"
                "#         Display mode:8 x 40          #"
                "########################################"


TEXT    100     "UART:9600,8,E,1;MODE:MC0;DIAG:O16,R100"

;                                                                   .


                                        ;--------------------------------
                                        ; Coldstart
                                        ;--------------------------------
            XOB     16
            SASI    1                   ; Assignation interface n°1
                    100                 ; Text 100
            EXOB
;                                                                   .

                                        ;--------------------------------
                                        ; Mainprogram
                                        ;--------------------------------
            COB     0
                    0
            CSB     0
            ECOB
;                                                                   .
```

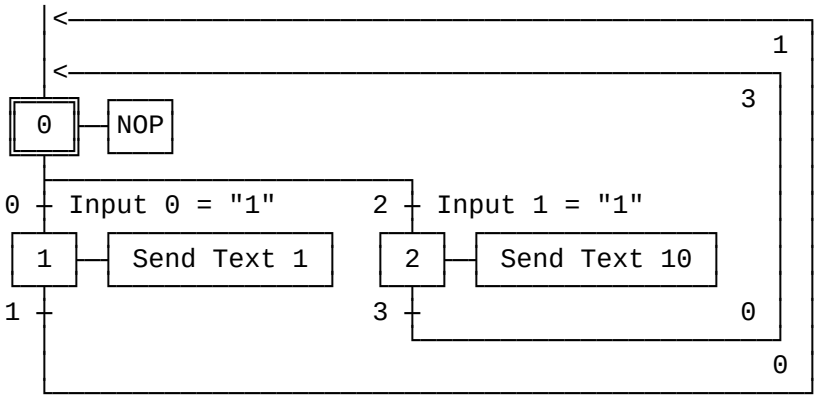


```
            SB     0
;-------------------------------
            IST    0                    ; NOP
                   I 1
                   I 3
                   O 0
                   O 2
            Acc    l

            EST                         ; 0
;-------------------------------

            ST     1                    ; Send Text 1
                   I 0
                   O 1
            STXT   1
                   1
            EST                         ; 1
;-------------------------------
            ST     2                    ; Send Text 10
                   I 2
                   O 3
            STXT   1
                   10
            EST                         ; 2
;=====================================================================

            TR     0                    ; Input 0 = "1"
                   I 0                  ; NOP
                   O 1
            STH    I       0
            DYN    F       0
            ANL    O       22           ; Text busy
            ETR                         ; 0
;-------------------------------
            TR     1
                   I 1
                   O 0                  ; NOP
            ETR                         ; 1
;-------------------------------
            TR     2                    ; Input 1 = "1"
                   I 0                  ; NOP
                   O 2
            STH    I       1
            DYN    F       1
            ANL    O       22           ; Text busy
            ETR                         ; 2
;-------------------------------
            TR     3
                   I 2
                   O 0                  ; NOP
            ETR                         ; 3

            ESB                         ; 0
;                                                                     .
```

8.2.3 Large and small character text output in BLOCTEC

```
;+-------------------------------------------------------------------+
;|                                                                   |
;|  User program example 8.2.3 for the industrial terminal PCD7.D250 |
;|  ================================================================|
;|  The program is structured in BLOCTEC                             |
;|                                                                   |
;|  File:        NDEMO23.SRC                                         |
;|                                                                   |
;|  Creation:    15.02.00        C. Bruegger                         |
;|                                                                   |
;+-------------------------------------------------------------------+


TEXT    1       "<27><64><77><49>"     ; Display mode:4 x 20
                "<12>"                 ; Clear display
                "<27><84>"             ; Cursor off
                "<27><64><78><48>"     ; Invert mode off
                " TERMINAL "
                "<27><64><78><49>"     ; Invert mode on
                "PCD7.D250"
                "<27><64><78><48>"     ; Invert mode off
                "<27><64><77><53>"     ; Transparent mode on
                "<27><64><77><48>"     ; Display mode:8 x 40
                "<12>"                 ; Clear display
                "<27><84>"             ; Cursor off
                "<5><5>"               ; Cursor down 2 x
                "---------------------------------------- "
                "     8 x 40 or 4 X 20 characters         "
                "  Interfaces RS232 or RS422 or CL 20mA   "
                "  Access to all data and text by modem   "
                "---------------------------------------- "
                "    SAIA -Burgess Electronics AG         "


TEXT    100     "UART:9600,8,E,1;MODE:MC0;DIAG:O16,R100"

;_____________________________________________________________________.


                                       ;--------------------------------
                                       ; Coldstart
                                       ;--------------------------------
            XOB    16
            SASI   1                   ; Assignation RS232 interface n°1
                   100                 ; Text 100
            EXOB
;=====================================================================

                                       ;--------------------------------
                                       ; Mainprogram
                                       ;--------------------------------
            COB    0
                   0
            STH    I       0
            DYN    F       0
            ANL    O       22          ; Text busy flag
            CPB    H       0           ; Send text


            ECOB
;=====================================================================

            PB     0                   ; Send text
            STXT   1                   ; Interface 1
                   1                   ; Text 1
            EPB
;_____________________________________________________________________.
```

8.3 Transmission of several texts

When the switches connected to input 0, 1 and 2 are switched on the following texts are transmitted to the terminal:

Input 0 : a simple text is displayed.

Input 1 : a text containing the state of the inputs 4 and 5 is displayed.

Input 2 : a text containing the state of the inputs 6 and 7 is displayed.

Displays take place in mode 4 x 20.

- 8.3.1 The user program is structured in BLOCTEC
- 8.3.2 The user program is structured in GRAFTEC *)

*) With this program, the functional readiness of the terminal is checked by the XOB16 cold start routine using the POLL instruction. This also coordinates the power-up processes of the controller and terminal with each other.

8.3.1 Transmission of several texts in BLOCTEC

```
;+-------------------------------------------------------------------+
;|                                                                   |
;|  User program example 8.3.1 for the industrial terminal PCD7.D250 |
;|  ================================================================|
;|  The program is structured in BLOCTEC                             |
;|                                                                   |
;|  File:       NDEMO31.SRC                                          |
;|                                                                   |
;|  Creation:   16.01.97        U.Jäggi                              |
;|  Modified:   03.02.00        C. Bruegger                          |
;|                                                                   |
;+-------------------------------------------------------------------+


TEXT    1       "<12>"                              ; Clear display
                     "<27><84>"                     ; cursor off
                     "  Main menue I0<10><13>  "
                     "  Display status    "
                     "  Input 4,5   : I1  "
                     "  Input 6,7   : I2  "

TEXT    2       "<12>"
                     "  Status <10><13>  "
                     "  Input  4 : $i0004<10><13>  "
                     "  Input  5 : $i0005<10><13>  "
                     "  Main menue I0  "

TEXT    3       "<12>"
                     "  Status <10><13>  "
                     "  Input 6 : $i0006<10><13>  "
                     "  Input 7 : $i0007<10><13>  "
                     "  Main menue I0  "

TEXT    4       "<27><64><77><49>"                  ; Display mode:4 x 20


TEXT    100     "UART:9600,8,E,1;MODE:MC0;DIAG:O16,R100"

;                                                                    .
```

```
                                        ;--------------------------------
                                        ; Coldstart
                                        ;--------------------------------
            XOB     16
            SASI    1                   ; Assignation RS232 interface
                    100                 ; Text 100
            STXT    1
                    4                   ; Text 4: mode 4 x 20

            EXOB
;                                                                       .

                                        ;--------------------------------
                                        ; Mainprogram
                                        ;--------------------------------
            COB     0
                    0
;                                                                       .

            STH     I       0
            DYN     F       0
            ANL     O       22          ; Text busy flag
            CFB     H       0           ; Send text
                    1                   ; Text 1
;                                                                       .

            STH     I       1
            DYN     F       1
            ANL     O       22          ; Text busy flag
            CFB     H       0           ; Send text
                    2                   ; Text 2
;                                                                       .

            STH     I       2
            DYN     F       2
            ANL     O       22          ; Text busy flag
            CFB     H       0           ; Send text
                    3                   ; Text 3
            ECOB
;=======================================================================

            FB      0                   ; Send text
            STXT    1                   ; Interface 1
                    =       1           ; Textnumber
            EFB
;                                                                       .
```

8.3.2 Transmission of several texts in GRAFTEC

```
;+-------------------------------------------------------------------+
;|                                                                   |
;|  User program example 8.3.2 for the industrial terminal PCD7.D250 |
;|  ================================================================|
;|  The program is structured in GRAFTEC                             |
;|                                                                   |
;|  File:       NDEMO32.SRC                                          |
;|                                                                   |
;|  Creation:   16.01.97        U.Jäggi                              |
;|  Modified:   03.02.00        C. Bruegger                          |
;|                                                                   |
;+-------------------------------------------------------------------+


TEXT    1       "<12>"                                  ; Clear display
                        "<27><84>"                      ; Cursor off
                        "  Main menue I0<10><13>  "
                        "  Display status    "
                        "  Input 4,5   : I1  "
                        "  Input 6,7   : I2  "

TEXT    2       "<12>"
                        "  Status <10><13>  "
                        "  Input  4 :$i0004<10><13>  "
                        "  Input  5 :$i0005<10><13>  "
                        "  Main menue I0  "

TEXT    3       "<12>"
                        "  Status <10><13>  "
                        "  Input  6 :$i0006<10><13>  "
                        "  Input  7 :$i0007<10><13>  "
                        "  Main menue I0  "

TEXT    4       "<27><64><77><49>"                      ; Display mode:4 x 20

TEXT    10      "<ESC>@B"                               ; Poll command


TEXT    100     "UART:9600,8,E,1;MODE:MC0;DIAG:O16,R100"
;                                                                   .


                                        ;--------------------------------
                                        ; Coldstart
                                        ;--------------------------------
            XOB     16
            SASI    1                   ; Assignation interface n°1
                    100                 ; Text 100

;                                                                   .
```

```
termpoll:   stxt   1                    ; START OF THE POLL COMMAND
                   10
            sth    O 22
            jr     h -1

            acc    h                    ; (ld T is accu dependent)
            ld     T 0                  ; start short receive timeout
                   2                    ; (must be min. 10 mS)
                   3
termwait:   sth    O 16                 ; character received?
            jr     h termok             ; yes
            sth    T 0
            jr     h termwait           ; loop for timeout period
            jr     termpoll             ; Terminal not ready, repeat the poll

termok:     srxd   1                    ; read the character
                   R 1
            cmp    R 1                  ; SOH character ?
                   1
            jr     z termready          ; yes, Terminal is ready
            jr     termpoll             ; no, repeat the poll

termready:  ld     R 1                  ; clear receive register
                   0                    ; END OF THE POLL COMMAND
;                                                                        .

            STXT   1                    ; Display mode : 4 x 20
                   4

            sth    O 22
            jr     h -1

            STXT   1                    ; Text 1: Main menu
                   1
            sth    O 22
            jr     h -1


            EXOB
;                                                                        .
```

```
                                        ;--------------------------------
                                        ; Mainprogram
                                        ;--------------------------------
            COB     0
                    0
            CSB     0
            ECOB
```

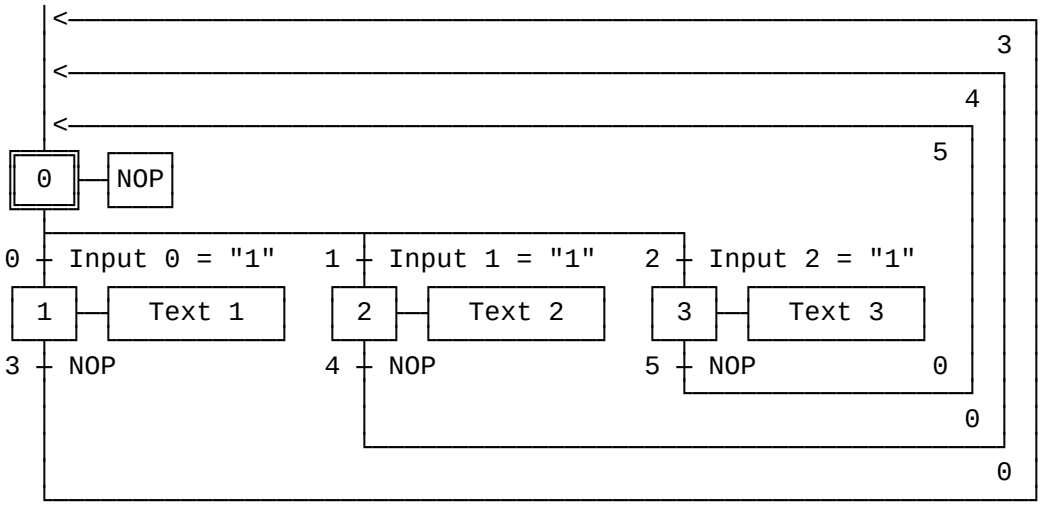


```
            SB      0
;                                                                       .
            IST     0                       ; NOP
                    I       3               ; NOP
                    I       4               ; NOP
                    I       5               ; NOP
                    O       0               ; Input 0 = "1"
                    O       1               ; Input 1 = "1"
                    O       2               ; Input 2 = "1"
            EST
;                                                                       .
            ST      1                       ; Text 1
                    I       0               ; Input 0 = "1"
                    O       3               ; NOP
            STXT    1
                    1
            EST
;                                                                       .
            ST      2                       ; Text 2
                    I       1               ; Input 1 = "1"
                    O       4               ; NOP
            STXT    1
                    2
            EST
;                                                                       .
            ST      3                       ; Text 3
                    I       2               ; Input 2 = "1"
                    O       5               ; NOP
            STXT    1
                    3
            EST
;=======================================================================
```

```
            TR      0                   ; Input 0 = "1"
                    I       0           ; NOP
                    O       1           ; Text 1
            STH     I       0
            DYN     F       0
            ANL     O       22          ; Text busy
            ETR
;                                                                       .

            TR      1                   ; Input 1 = "1"
                    I       0           ; NOP
                    O       2           ; Text 2
            STH     I       1
            DYN     F       1
            ANL     O       22          ; Text busy
            ETR
;                                                                       .

            TR      2                   ; Input 2 = "1"
                    I       0           ; NOP
                    O       3           ; Text 3
            STH     I       2
            DYN     F       2
            ANL     O       22          ; Text busy
            ETR
;                                                                       .

            TR      3                   ; NOP
                    I       1           ; Text 1
                    O       0           ; NOP
            ETR
;                                                                       .

            TR      4                   ; NOP
                    I       2           ; Text 2
                    O       0           ; NOP
            ETR
;                                                                       .

            TR      5                   ; NOP
                    I       3           ; Text 3
                    O       0           ; NOP
            ETR

            ESB
;                                                                       .
```

8.4 Recognition of a pressed key with a following action

When one of the function keys F1, F2 or F3 is pressed the following texts are transmitted.

Key F1 : a simple text is displayed

Key F2 : a text containing the state of the inputs 0 to 7 is displayed.

Key F3 : a text containing the the value of the BCD switches connected to the inputs 0...7 is displayed.

Key F4 : a text containing the date, week and time is displayed..

When the function keys are pressed the corresponding text is sent to the terminal once only. If a value is to be refreshed cyclically on the terminal, the following points concerning text output should be noted in order to achieve a stable display:

- Switch off the cursor
- Don't send the control code "12" (clear screen) at the beginning of the text.

- 8.4.1 The user program contains jumps *)
- 8.4.2 The user program is structured in BLOCTEC *)
- 8.4.3 The user program is structured in GRAFTEC *)

*) With these programs, the functional readiness of the terminal is checked by the XOB16 cold start routine using the POLL instruction. This also coordinates the power-up processes of the controller and terminal with each other.

8.4.1 Recognition of a pressed key with a following action (contains jumps)

```
;+-----------------------------------------------------------------------+
;|                                                                       |
;|  User program example 8.4.1 for the industrial terminal PCD7.D250     |
;|  ===================================================================  |
;|  The program contains jumps                                           |
;|                                                                       |
;|  File:       NDEMO41.SRC                                              |
;|                                                                       |
;|  Creation:   29.01.97        U.Jäggi                                  |
;|  Modified:   07.02.00        C. Bruegger                              |
;|                                                                       |
;+-----------------------------------------------------------------------+

TEXT    1       "<12>"                                  ; Clear display
                        "<27><84>"                      ; Cursor off
                        "  Main menu    F1<10><13>"
                        "  I/O   0..23  F2<10><13>"
                        "  BCD-Switch   F3<10><13>"
                        "  Date/Time    F4"

TEXT    2       "<12>"                                  ; Clear display
                        "  Input Status<10><13>"
                        "  I0..7  :$I0000<10><13>"
                        "  O16..23:$O0016<10><13>"
                        "  Main menu  F1"

TEXT    3       "<12>"                                  ; Clear display
                        "  BCD-Value I0...7 <10><13>"
                        "  ---------------- <10><13>"
                        "  Value  : $R0010 <10><13>"
                        "  Main menu   F1"

TEXT    4       "<12>"                                  ; Clear display
                        "  Date : $D<10><13>"
                        "  Week : $W<10><13>"
                        "  Time : $H<10><13>"
                        "  Main menu  F1"

TEXT    5       "<27><64><77><49>"                      ; Display mode:4 x 20

TEXT    10      "<ESC>@B"                               ; Poll command

TEXT    100     "UART:9600,8,E,1;MODE:MC0;DIAG:O16,R100"

                                        ; Symboldefinitions
;=============================================================================
                                        ; Diagnostic outputs serial interface
                                        ;-------------------------------------
RBSY        EQU     O       16          ; Receiver Busy
RFUL        EQU     O       RBSY+1      ; Receive Buffer Full
RDIA        EQU     O       RBSY+2      ; Receiver Diagnostic
TBSY        EQU     O       RBSY+3      ; Transmitter Busy
TFUL        EQU     O       RBSY+4      ; Transmit Buffer Full
TDIA        EQU     O       RBSY+5      ; Transmitter Diagnostic
XBSY        EQU     O       RBSY+6      ; Text Busy
NEXE        EQU     O       RBSY+7      ; Not Executed
                                        ;--------------------------------
                                        ; Function/Program blocks
                                        ;--------------------------------
READ        EQU     FB      0           ; Read character
SEND        EQU     FB      1           ; Send text
COMPARE     EQU     PB      0           ; Compare received character
                                        ;--------------------------------
                                        ; Register
                                        ;--------------------------------
RBUF_R      EQU     R       1000
;_____________________________________________________________________________.
```

```
                                        ;--------------------------------
                                        ; Coldstart
                                        ;--------------------------------
            XOB     16
            SASI    1                   ; Assignation interface n°1
                    100                 ; Text 100

;                                                                       .

termpoll:   stxt    1                   ; START OF THE POLL COMMAND
                    10
            sth     O 22
            jr      h -1

            acc     h                   ; (ld T is accu dependent)
            ld      T 0                 ; start short receive timeout
                    4                   ; (must be min. 10 mS)
                    5
termwait:   sth     O 16                ; character received?
            jr      h termok            ; yes
            sth     T 0
            jr      h termwait          ; loop for timeout period
            jr      termpoll            ; Terminal not ready, repeat the poll

termok:     srxd    1                   ; read the character
                    R 1
            cmp     R 1                 ; SOH character ?
                    1
            jr      z termready         ; yes, Terminal is ready
            jr      termpoll            ; no, repeat the poll

termready:  ld      R 1                 ; clear receive register
                    0                   ; END OF THE POLL COMMAND
;                                                                       .


            STXT    1                   ; Display mode : 4 x 20
                    5

            sth     O 22
            jr      h -1

            STXT    1                   ; Main menu
                    1
            sth     O 22
            jr      h -1


            EXOB
;                                                                       .
```

```
                                        ;--------------------------------
                                        ; Main program
                                        ;--------------------------------
            COB     0
                    0
            STH     O       RBSY        ; Receiver busy
            ANL     O       XBSY        ; Text busy
            JR      L       END         ; If RBSY = low then do nothing
            SRXD    1                   ; Interface 1
                    R       RBUF_R      ; Receive buffer register
;                                                                       .

                                        ; Compare received character
            CMP     R       RBUF_R
                    K       65          ; F1
            ACC     Z
            JR      L       F2
            STXT    1                   ; Interface 1
                    1                   ; Text 1
            JR      END
;                                                                       .

F2:         CMP     R       RBUF_R
                    K       66          ; F2
            ACC     Z
            JR      L       F3
            STXT    1                   ; Interface 1
                    2                   ; Text 2
            JR      END
;                                                                       .

F3:         CMP     R       RBUF_R
                    K       67          ; F3
            ACC     Z
            JR      L       F4
            STXT    1                   ; Interface 1
                    3                   ; Text 3
            JR      END
;                                                                       .

F4:         CMP     R       RBUF_R
                    K       68          ; F4
            ACC     Z
            JR      L       END
            STXT    1                   ; Interface 1
                    4                   ; Text 4
            JR      END
;                                                                       .

                                        ; Read BCD-Switch
END:        DIGI    2
                    I       0
                    R       10
;                                                                       .

            ECOB
```

8.4.2 Recognition of a pressed key with a following action in BLOCTEC

```
;+-------------------------------------------------------------------+
;|                                                                   |
;|  User program example 8.4.2 for the industrial terminal PCD7.D160/170 |
;|  ================================================================ |
;|  The program is structured in BLOCTEC                             |
;|                                                                   |
;|  File:       NDEMO42.SRC                                          |
;|                                                                   |
;|  Creation:   29.01.97        U.Jäggi                              |
;|  Modified:   07.07.00        C.Bruegger                           |
;|                                                                   |
;+-------------------------------------------------------------------+

TEXT    1       "<12>"                                  ; Clear display
                        "<27><84>"                      ; Cursor off
                        "  Main menu    F1<10><13>"
                        "  I/O   0..23  F2<10><13>"
                        "  BCD-Switch   F3<10><13>"
                        "  Date/Time    F4"

TEXT    2       "<12>"                                  ; Clear display
                        "  Input Status <10><13>"
                        "  I0..7  :$I0000 <10><13>"
                        "  O16..23:$O0016 <10><13>"
                        "  Main menu  F1"

TEXT    3       "<12>"                                  ; Clear display
                        "  BCD-Value I0...7 <10><13>"
                        "  ---------------- <10><13>"
                        "  Value  : $R0010 <10><13>"
                        "  Main menu   F1"

TEXT    4       "<12>"                                  ; Clear display
                        "  Date : $D<10><13>"
                        "  Week : $W<10><13>"
                        "  Time : $H<10><13>"
                        "  Main menu  F1"

TEXT    5       "<27><64><77><49>"                      ; Display mode:4 x 20

TEXT    10      "<ESC>@B"                               ; Poll command

TEXT    100     "UART:9600,8,E,1;MODE:MC0;DIAG:O16,R100"

                                        ; Symboldefinitions
;=============================================================================
                                        ; Diagnostic outputs serial interface
                                        ;-------------------------------------
RBSY        EQU     O       16          ; Receiver Busy
RFUL        EQU     O       RBSY+1      ; Receive Buffer Full
RDIA        EQU     O       RBSY+2      ; Receiver Diagnostic
TBSY        EQU     O       RBSY+3      ; Transmitter Busy
TFUL        EQU     O       RBSY+4      ; Transmit Buffer Full
TDIA        EQU     O       RBSY+5      ; Transmitter Diagnostic
XBSY        EQU     O       RBSY+6      ; Text Busy
NEXE        EQU     O       RBSY+7      ; Not Executed
                                        ;--------------------------------
                                        ; Function/Program blocks
                                        ;--------------------------------
READ        EQU     FB      0           ; Read character
SEND        EQU     FB      1           ; Send text
COMPARE     EQU     PB      0           ; Compare received character
                                        ;--------------------------------
                                        ; Register
                                        ;--------------------------------
RBUF_R      EQU     R       1000
;                                                                       .
```

```
                                        ;--------------------------------
                                        ; Coldstart
                                        ;--------------------------------
            XOB     16
            SASI    1                   ; Assignation interface n°1
                    100                 ; Text 100

;                                                                       .

termpoll:   stxt    1                   ; START OF THE POLL COMMAND
                    10
            sth     O 22
            jr      h -1

            acc     h                   ; (ld T is accu dependent)
            ld      T 0                 ; start short receive timeout
                    6                   ; (must be min. 10 mS)
                    7
termwait:   sth     O 16                ; character received?
            jr      h termok            ; yes
            sth     T 0
            jr      h termwait          ; loop for timeout period
            jr      termpoll            ; Terminal not ready, repeat the poll

termok:     srxd    1                   ; read the character
                    R 1
            cmp     R 1                 ; SOH character ?
                    1
            jr      z termready         ; yes, Terminal is ready
            jr      termpoll            ; no, repeat the poll

termready:  ld      R 1                 ; clear receive register
                    0                   ; END OF THE POLL COMMAND
;                                                                       .

            STXT    1                   ; Display mode : 4 x 20
                    5

            sth     O 22
            jr      h -1

            STXT    1                   ; Main menu
                    1
            sth     O 22
            jr      h –1

            CFB     SEND

            EXOB    1
;                                                                       .
```

```
                                        ;--------------------------------
                                        ; Main program
                                        ;--------------------------------
            COB     0
                    0
            STH     O       RBSY        ; Receiver busy
            ANL     O       XBSY        ; Text busy
            CFB     H       READ        ; Read character
                    R       RBUF_R      ; Receive buffer register
            CPB     H       COMPARE     ; Compare received character
;                                                                       .

                                        ; Read BCD-Switch
            DIGI    2
                    I       0
                    R       10

            ECOB
;                                                                       .

            PB      COMPARE             ; Compare received character

                                        ;---------------------; Key = F1 ?
            CMP     R       RBUF_R
                    K       65          ; F1
            ACC     Z
            CFB     H       SEND        ; Send text
                    1                   ; Text 1
                                        ;---------------------; Key = F2 ?
            CMP     R       RBUF_R
                    K       66          ; F2
            ACC     Z
            CFB     H       SEND        ; Send text
                    2                   ; Text 2
                                        ;---------------------; Key = F3 ?
            CMP     R       RBUF_R
                    K       67          ; F3
            ACC     Z
            CFB     H       SEND        ; Send text
                    3                   ; Text 3
                                        ;---------------------; Key = F4 ?
            CMP     R       RBUF_R
                    K       68          ; F4
            ACC     Z
            CFB     H       SEND        ; Send text
                    4                   ; Text 4
                                        ;--------------------------------
            EPB
;                                                                       .

            FB      READ                ; Read character
            SRXD    1                   ; Interface 1
                    =       1
            EFB
;                                                                       .

            FB      SEND                ; Send text
            STXT    1                   ; Interface 1
                    =       1           ; Textnumber
            EFB
;                                                                       .
```

8.4.3 Recognition of a pressed key with a following action in GRAFTEC

```
;+-----------------------------------------------------------------------+
;|                                                                       |
;|  User program example 8.4.3 for the industrial terminal PCD7.D250     |
;|  ===================================================================  |
;|  The program is structured in GRAFTEC                                 |
;|                                                                       |
;|  File:       NDEMO43.SRC                                              |
;|                                                                       |
;|  Creation:   29.01.97        U.Jäggi/T.Hofer                          |
;|  Modified:   07.02.00        C. Bruegger                              |
;|                                                                       |
;+-----------------------------------------------------------------------+

TEXT    1       "<12>"                                  ; Clear display
                        "<27><84>"                      ; Cursor off
                        "  Main menu    F1<10><13>"
                        "  I/O   0..23  F2<10><13>"
                        "  BCD-Switch   F3<10><13>"
                        "  Date/Time    F4"

TEXT    2       "<12>"                                  ; Clear display
                        "  Input Status <10><13>"
                        "  I0..7  :$I0000 <10><13>"
                        "  O16..23:$O0016 <10><13>"
                        "  Main menu  F1"

TEXT    3       "<12>"                                  ; Clear display
                        "  BCD-Value I0...7 <10><13>"
                        "  ---------------- <10><13>"
                        "  Value  : $R0010 <10><13>"
                        "  Main menu   F1"

TEXT    4       "<12>"                                  ; Clear display
                        "  Date : $D<10><13>"
                        "  Week : $W<10><13>"
                        "  Time : $H<10><13>"
                        "  Main menu  F1"

TEXT    5       "<27><64><77><49>"                      ; Display mode:4 x 20

TEXT    10      "<ESC>@B"                               ; Poll command

TEXT    100     "UART:9600,8,E,1;MODE:MC0;DIAG:O16,R100"

                                        ; Symboldefinitions
;=============================================================================
                                        ; Diagnostic outputs serial interface
                                        ;-------------------------------------
RBSY        EQU     O       16          ; Receiver Busy
RFUL        EQU     O       RBSY+1      ; Receive Buffer Full
RDIA        EQU     O       RBSY+2      ; Receiver Diagnostic
TBSY        EQU     O       RBSY+3      ; Transmitter Busy
TFUL        EQU     O       RBSY+4      ; Transmit Buffer Full
TDIA        EQU     O       RBSY+5      ; Transmitter Diagnostic
XBSY        EQU     O       RBSY+6      ; Text Busy
NEXE        EQU     O       RBSY+7      ; Not Executed
                                        ;--------------------------------
                                        ; Function/Program blocks
                                        ;--------------------------------
READ        EQU     FB      0           ; Read character
SEND        EQU     FB      1           ; Send text
COMPARE     EQU     PB      0           ; Compare received character
                                        ;--------------------------------
                                        ; Register
                                        ;--------------------------------
RBUF_R      EQU     R       1000
;_____________________________________________________________________________.
```

```
                                        ;--------------------------------
                                        ; Coldstart
                                        ;--------------------------------
            XOB     16
            SASI    1                   ; Assignation interface n°1
                    100                 ; Text 100

;                                                                       .

termpoll:   stxt    1                   ; START OF THE POLL COMMAND
                    10
            sth     O 22
            jr      h -1

            acc     h                   ; (ld T is accu dependent)
            ld      T 0                 ; start short receive timeout
                    8                   ; (must be min. 10 mS)
                    9
termwait:   sth     O 16                ; character received?
            jr      h termok            ; yes
            sth     T 0
            jr      h termwait          ; loop for timeout period
            jr      termpoll            ; Terminal not ready, repeat the poll

termok:     srxd    1                   ; read the character
                    R 1
            cmp     R 1                 ; SOH character ?
                    1
            jr      z termready         ; yes, Terminal is ready
            jr      termpoll            ; no, repeat the poll

termready:  ld      R 1                 ; clear receive register
                    0                   ; END OF THE POLL COMMAND
;                                                                       .


            STXT    1                   ; Display mode : 4 x 20
                    5

            sth     O 22
            jr      h -1

            STXT    1                   ; Text 1: Main menu
                    1
            sth     O 22
            jr      h -1


            EXOB
;                                                                       .
```

```
                                        ;-------------------------------
                                        ; Main program
                                        ;-------------------------------
            COB     0
                    0
            CSB     0
;                                                                       .

                                        ; Read BCD-Switch
            DIGI    2
                    I       0
                    R       10

            ECOB
;                                                                       .
```

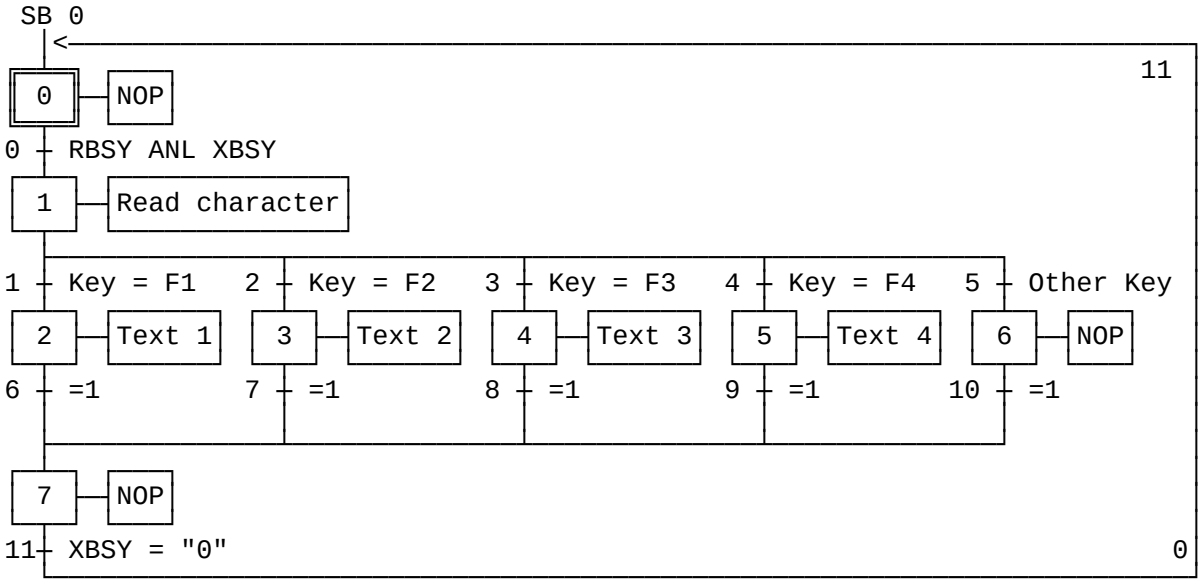


```
            SB      0
;                                                                       .

            IST     0                   ; NOP
                    I       11          ; XBSY = "0"
                    O       0           ; RBSY ANL XBSY
            EST
;                                                                       .

            ST      1                   ; Read character
                    I       0           ; RBSY ANL XBSY
                    O       1           ; Key = F1
                    O       2           ; Key = F2
                    O       3           ; Key = F3
                    O       4           ; Key = F4
                    O       5           ; Other key
            SRXD    1
                    R       RBUF_R
            EST
;                                                                       .

            ST      2                   ; Text 1
                    I       1           ; Key = F1
                    O       6           ; =1
            STXT    1                   ; send
                    1                   ; text 1
            EST
;                                                                       .
```

```
            ST      3                   ; Text 2
                    I    2              ; Key = F2
                    O    7              ; =1
            STXT    1                   ; send
                    2                   ; text 2
            EST
;                                                                       .

            ST      4                   ; Text 3
                    I    3              ; Key = F3
                    O    8              ; =1
            STXT    1                   ; send
                    3                   ; text 3
            EST
;                                                                       .

            ST      5                   ; Text 4
                    I    4              ; Key = F4
                    O    9              ; =1
            STXT    1                   ; send
                    4                   ; text 4
            EST
;                                                                       .

            ST      6                   ; NOP
                    I    5              ; Other key
                    O    10             ; =1
            EST
;                                                                       .

            ST      7                   ; NOP
                    I    6              ; =1
                    I    7              ; =1
                    I    8              ; =1
                    I    9              ; =1
                    I    10             ; =1
                    O    11             ; XBSY = "0"
            EST
;                                                                       .

            TR      0                   ; RBSY ANL XBSY
                    I    0              ; NOP
                    O    1              ; Read character
            STH     O       16          ; Receiver busy
            ANL     O       22          ; Text busy
            ETR
;                                                                       .

            TR      1                   ; Key = F1
                    I    1              ; Read character
                    O    2              ; Text 1
            CMP     R       RBUF_R
                    K       65          ; F1
            ACC     Z
            ETR
;                                                                       .

            TR      2                   ; Key = F2
                    I    1              ; Read character
                    O    3              ; Text 2
            CMP     R       RBUF_R
                    K       66          ; F2
            ACC     Z
            ETR
;                                                                       .
```

```
            TR      3                       ; Key = F3
                    I     1                 ; Read character
                    O     4                 ; Text 3
            CMP     R        RBUF_R
                    K        67             ; F3
            ACC     Z
            ETR
;                                                                       .

            TR      4                       ; Key = F4
                    I     1                 ; Read character
                    O     5                 ; Text 4
            CMP     R        RBUF_R
                    K        68             ; F4
            ACC     Z
            ETR
;                                                                       .

            TR      5                       ; Other key
                    I     1                 ; Read character
                    O     6                 ; NOP
            ETR
;                                                                       .

            TR      6                       ; =1
                    I     2                 ; Text 1
                    O     7                 ; NOP
            ETR
;                                                                       .

            TR      7                       ; =1
                    I     3                 ; Text 2
                    O     7                 ; NOP
            ETR
;                                                                       .

            TR      8                       ; =1
                    I     4                 ; Text 3
                    O     7                 ; NOP
            ETR
;                                                                       .

            TR      9                       ; =1
                    I     5                 ; Text 4
                    O     7                 ; NOP
            ETR
;                                                                       .

            TR      10                      ; =1
                    I     6                 ; NOP
                    O     7                 ; NOP
            ETR
;                                                                       .

            TR      11                      ; XBSY = "0"
                    I     7                 ; NOP
                    O     0                 ; NOP
            STL     O        22             ; Text busy
            ETR
;                                                                       .

            ESB
```

8.5 Entering numerical parameters

Guided by a menu the contents of a register and counter should be modified by the terminal.

Conditions:

- The values for the register should be input in either positive or negative values using the form at with a fixed decimal point.
- The values for the counter may be input as positive only and without decimal point.

- User program example next page

To realise that function the universal function block **INPUT** had been developed. The complete description of that function block can be found attached to the listing of the demonstration program (see chapter 8.6).

Entering numerical parameters

```
;+-------------------------------------------------------------------+
;|                                                                   |
;|  User program example 8.5 for the industrial terminal PCD7.D250   |
;|  ==============================================================   |
;|  Input of numerical parameters                                    |
;|                                                                   |
;|  File:       DEMO.SRC                                             |
;|  Version:    1.0                                                  |
;|                                                                   |
;|  Creation:   21.01.93        U.Jäggi                              |
;|  Modified:   08.02.00        C. Bruegger                          |
;|                                                                   |
;+-------------------------------------------------------------------+

RBSY_F      EQU    O 32                ; Receiver Busy
            PUBL   RBSY_F
XBSY_F      EQU    O 38                ; Text Busy
            PUBL   XBSY_F
SIGN        EQU    O 48                ; Sign input
IN_BUSY     EQU    O 49                ; Input busy
            PUBL   IN_BUSY
DIGIT       EQU    R 0                 ; Number of digits
X_POS       EQU    R 1                 ; X-position
Y_POS       EQU    R 2                 ; Y-position
DECIMAL     EQU    R 3                 ; Number of decimal places
            DOC    R 500
DIAG_R      EQU    R 999               ; Diagnostic register
            DOC    R 1000
            DOC    C 100
MAIN        EQU    TEXT 0              ; Main menue
IN_TXT_R    EQU    TEXT 1              ; Input text register
IN_TXT_C    EQU    TEXT 2              ; Input text counter
DISP        EQU    TEXT 10

ASSIGN      EQU    TEXT 999            ; Assignation of the serial interfac
CHAN_N      EQU    1                   ; Number of serial channel
            PUBL   CHAN_N
            DOC    COB 0
            DOC    XOB 16
INPUT       EQU    FB 0                ; Functionblock input
            PUBL   INPUT


TEXT    ASSIGN    "UART:9600,8,E,1;"
                  "MODE:MC0;"
                  "DIAG:",RBSY_F.T,",",DIAG_R.T,""

TEXT    DISP      "<27><64><77><49>"                ; Display mode:4 x 20

TEXT    MAIN      "<12>"                            ; Clear display
                  "<27><84>"                        ; Cursor off
                  "==PARAMETER  INPUT=="
                  "--------------------"
                  "MODIFY REGISTER [F1]"
                  "MODIFY COUNTER  [F2]"

TEXT    IN_TXT_R  "<12>"
                  "R-Value : $%00.3d$R0500<10><13>"
                  "ACCEPT VALUE    [CR]"
                  "MODIFY VALUE    [F1]"
                  "MAIN MENU       [F2]"

TEXT    IN_TXT_C  "<12>"
                  "C-Value : $C0100<10><13>"
                  "ACCEPT VALUE    [CR]"
                  "MODIFY VALUE    [F1]"
                  "MAIN MENU       [F2]"
```

```
                                        ;--------------------------------
                                        ; Coldstart
                                        ;--------------------------------
            XOB     16

            SASI    CHAN_N              ; Assignation RS232 interface
                    ASSIGN              ; Text 100
            ACC     H
            RES     IN_BUSY             ; Reset input busy flag

            STXT    CHAN_N
                    DISP

            EXOB

;=====================================================================

                                        ;--------------------------------
                                        ; Main program
                                        ;--------------------------------
            COB     0
                    0

            CSB     0                   ; Call communication SB 0

            ECOB
;                                                                      .
```

SB 0

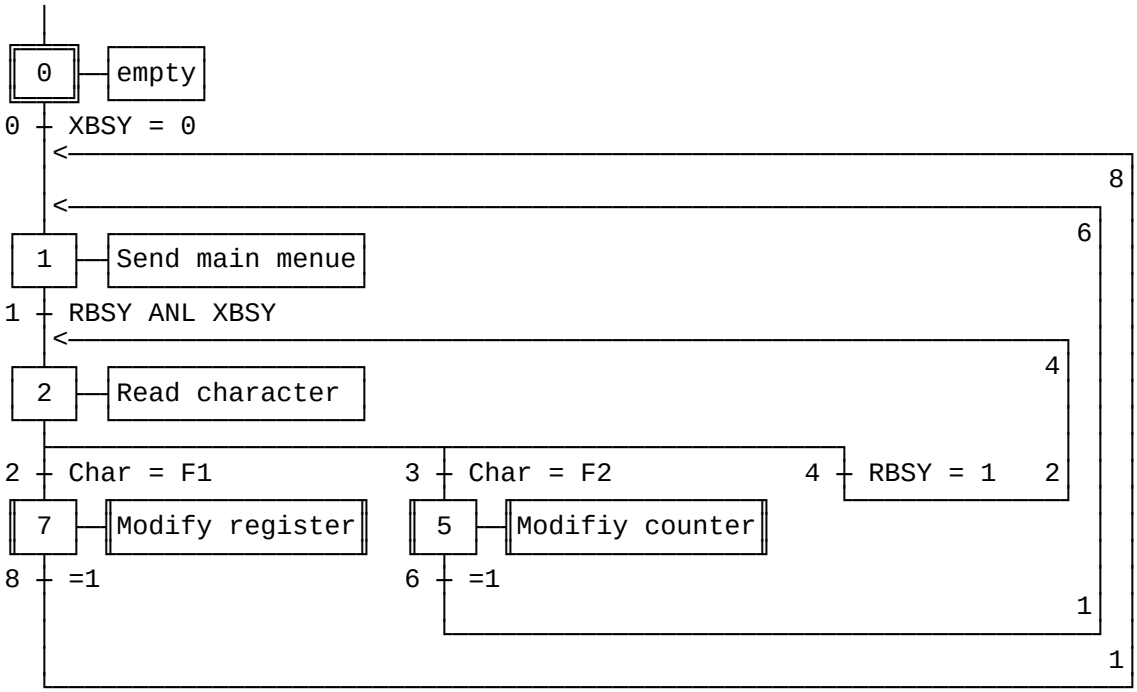

Page Nb 5, Modify counter

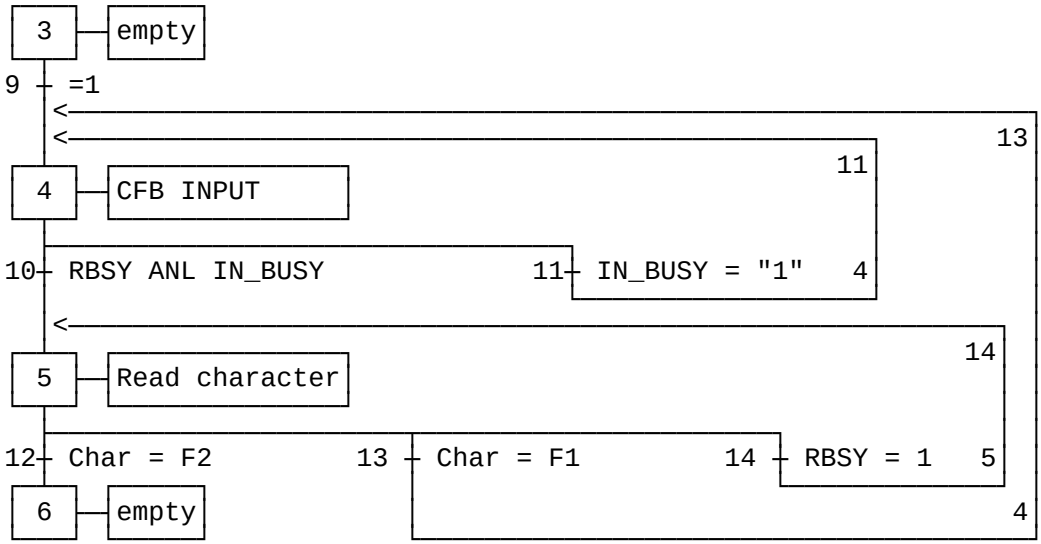

Page Nb 7, Modify register

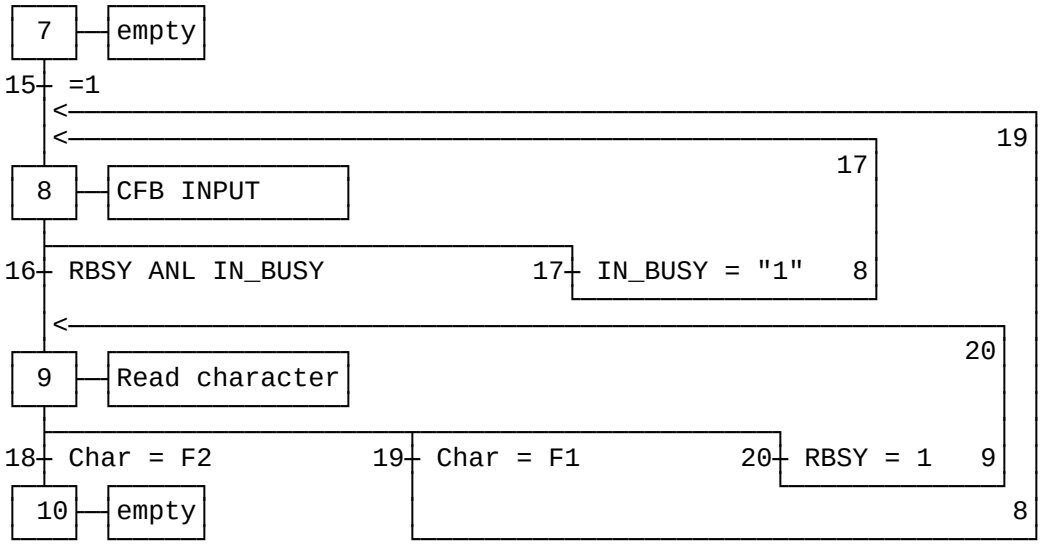


```
            SB      0
;                                                                       .

            IST     0                       ; empty
                    O 0                     ; XBSY = 0
            EST
;                                                                       .

            ST      1                       ; Send main menue
                    I 0                     ; XBSY = 0
                    I 8                     ; =1
                    I 6                     ; =1
                    O 1                     ; RBSY ANL XBSY
            STXT    CHAN_N                  ; Send
                    MAIN                    ; the main menue
            EST
;                                                                       .
```

```
            ST      2                   ; Read character
                    I 1                 ; RBSY ANL XBSY
                    I 4                 ; RBSY = 1
                    O 2                 ; Char = F1
                    O 3                 ; Char = F2
                    O 4                 ; RBSY = 1
            SRXD    CHAN_N              ; Read character
                    R 1000              ; from the receive buffer
            EST
;                                                                       .

            ST      3                   ; empty
                    I 3                 ; Char = F2
                    O 9                 ; =1
            EST
;                                                                       .

            ST      4                   ; CFB INPUT
                    I 9                 ; =1
                    I 11                ; IN_BUSY = "1"
                    I 13                ; Char = F1
                    O 10                ; RBSY ANL IN_BUSY
                    O 11                ; IN_BUSY = "1"
            RES     SIGN                ; Sign input not allowed
            LD      X_POS               ; X-position
                    42
            LD      Y_POS               ; Y-position
                    32
            LD      DIGIT               ; Number of digits
                    9
            LD      DECIMAL             ; Number of decimal places
                    0
            CFB     INPUT               ; D100 input
                    IN_TXT_C            ; Input text counter
                    C 100               ; Counter to be modified
                    DIGIT               ; Number of digits
                    DECIMAL             ; Number of decimal places
                    X_POS               ; X-position
                    Y_POS               ; Y-position
                    SIGN                ; Sign input yes/no (1/0)
            EST
;                                                                       .

            ST      5                   ; Read character
                    I 10                ; RBSY ANL IN_BUSY
                    I 14                ; RBSY = 1
                    O 12                ; Char = F2
                    O 13                ; Char = F1
                    O 14                ; RBSY = 1
            SRXD    CHAN_N              ; Read character
                    R 1000              ; from the receive buffer
            EST
;                                                                       .

            ST      6                   ; empty
                    I 12                ; Char = F2
                    O 6                 ; =1
            EST
;                                                                       .

            ST      7                   ; empty
                    I 2                 ; Char = F1
                    O 15                ; =1
            EST
;                                                                       .
```

```
            ST      8                   ; CFB INPUT
                    I 15                ; =1
                    I 17                ; IN_BUSY = "1"
                    I 19                ; Char = F1
                    O 16                ; RBSY ANL IN_BUSY
                    O 17                ; IN_BUSY = "1"
            SET     SIGN                ; Sign input allowed
            LD      X_POS               ; X-position
                    42
            LD      Y_POS               ; Y-position
                    32
            LD      DIGIT               ; Number of digits
                    9
            LD      DECIMAL             ; Number of decimal places
                    3
            CFB     INPUT               ; D100 input
                    IN_TXT_R            ; Input text register
                    R 500               ; Register to be modified
                    DIGIT               ; Number of digits
                    DECIMAL             ; Number of decimal places
                    X_POS               ; X-position
                    Y_POS               ; Y-position
                    SIGN                ; Sign input yes/no (1/0)
            EST
;                                                                       .

            ST      9                   ; Read character
                    I 16                ; RBSY ANL IN_BUSY
                    I 20                ; RBSY = 1
                    O 18                ; Char = F2
                    O 19                ; Char = F1
                    O 20                ; RBSY = 1
            SRXD    CHAN_N              ; Read character
                    R 1000              ; from the receive buffer
            EST
;                                                                       .

            ST      10                  ; empty
                    I 18                ; Char = F2
                    O 8                 ; =1
            EST

;=======================================================================

            TR      0                   ; XBSY = 0
                    I 0                 ; empty
                    O 1                 ; Send main menue
            STL     XBSY_F
            ETR
;                                                                       .

            TR      1                   ; RBSY ANL XBSY
                    I 1                 ; Send main menue
                    O 2                 ; Read character
            STH     RBSY_F
            ANL     XBSY_F
            ETR
;                                                                       .

            TR      2                   ; Char = F1
                    I 2                 ; Read character
                    O 7                 ; empty
            CMP     R 1000
                    K 65                ; F1
            ACC     Z
            ETR
;                                                                       .
```

```
            TR      3                   ; Char = F2
                    I 2                 ; Read character
                    O 3                 ; empty
            CMP     R 1000
                    K 66                ; F2
            ACC     Z
            ETR
;                                                                       .

            TR      4                   ; RBSY = 1
                    I 2                 ; Read character
                    O 2                 ; Read character
            STH     RBSY_F
            ETR
;                                                                       .

            TR      5                   ; Modify counter
                    I 3                 ; empty
                    O 6                 ; empty
            ETR
;                                                                       .

            TR      6                   ; =1
                    I 6                 ; empty
                    O 1                 ; Send main menue
            ETR
;                                                                       .

            TR      7                   ; Modify register
                    I 7                 ; empty
                    O 10                ; empty
            ETR
;                                                                       .

            TR      8                   ; =1
                    I 10                ; empty
                    O 1                 ; Send main menue
            ETR
;                                                                       .

            TR      9                   ; =1
                    I 3                 ; empty
                    O 4                 ; CFB INPUT
            ETR
;                                                                       .

            TR      10                  ; RBSY ANL IN_BUSY
                    I 4                 ; CFB INPUT
                    O 5                 ; Read character
            STH     RBSY_F
            ANL     IN_BUSY
            ETR
;                                                                       .

            TR      11                  ; IN_BUSY = "1"
                    I 4                 ; CFB INPUT
                    O 4                 ; CFB INPUT
            STH     IN_BUSY
            ETR
;                                                                       .

            TR      12                  ; Char = F2
                    I 5                 ; Read character
                    O 6                 ; empty
            CMP     R 1000
                    K 66                ; F2
            ACC     Z
            ANL     XBSY_F
            ETR
;                                                                       .
```

```
            TR      13                  ; Char = F1
                    I 5                 ; Read character
                    O 4                 ; CFB INPUT
            CMP     R 1000
                    K 65                ; F1
            ACC     Z
            ANL     XBSY_F
            ETR
;                                                                       .

            TR      14                  ; RBSY = 1
                    I 5                 ; Read character
                    O 5                 ; Read character
            STH     RBSY_F
            ETR
;                                                                       .

            TR      15                  ; =1
                    I 7                 ; empty
                    O 8                 ; CFB INPUT
            ETR
;                                                                       .

            TR      16                  ; RBSY ANL IN_BUSY
                    I 8                 ; CFB INPUT
                    O 9                 ; Read character
            STH     RBSY_F
            ANL     IN_BUSY
            ETR
;                                                                       .

            TR      17                  ; IN_BUSY = "1"
                    I 8                 ; CFB INPUT
                    O 8                 ; CFB INPUT
            STH     IN_BUSY
            ETR
;                                                                       .

            TR      18                  ; Char = F2
                    I 9                 ; Read character
                    O 10                ; empty
            CMP     R 1000
                    K 66                ; F2
            ACC     Z
            ANL     XBSY_F
            ETR
;                                                                       .

            TR      19                  ; Char = F1
                    I 9                 ; Read character
                    O 8                 ; CFB INPUT
            CMP     R 1000
                    K 65                ; F1
            ACC     Z
            ANL     XBSY_F
            ETR
;                                                                       .

            TR      20                  ; RBSY = 1
                    I 9                 ; Read character
                    O 9                 ; Read character
            STH     RBSY_F
            ETR

            ESB
;                                                                       .
```

8.6 Function block : INPUT

Data entry using the PCD7.D250 industrial terminal:

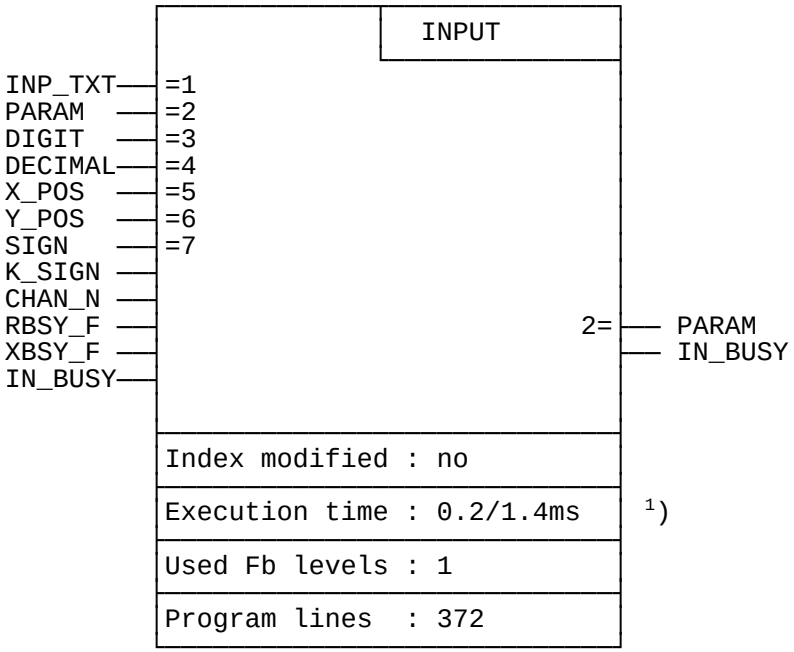

1) 0.2 ms: RBSY_F = "0" (no character in receive buffer)

1.4 ms: RBSY_F = "1" (number 0...9 is read from the receive buffer and processed)

Function description

This function block allows the editing of the contents of a register or counter via the PCD7.D250 industrial terminal. A minus sign and decimal point are supported.

List of inputs and outputs

Symbol	Description	Para-meter	Data			Address
			Type	Format	Value	
INP_TXT	Input Text	yes	X	Text	any value	0...3999
PARAM	Input parameter (registers or counters)	yes	R/C	Integer	– 2 147 483 648... + 2 147 483 647	0...4095
DIGIT	Number of digits	yes	R	Integer	1...11	0...4095
DECIMAL	Number of decimal places	yes	R	Integer	0,1...10	0...4095
X_POS	Cursor x-position	yes	R	Integer	32...51	0...4095
Y_POS	Cursor y-position	yes	R	Integer	32...35	0...4095
SIGN	Sign yes/no (1/0)	yes	F/I/O	Binary	0/1	0...8191
K_SIGN	Sign key (ASCII-Code)	no	K	ASCII	0...255	–
CHAN_N	Serial channel number	no	K	Number	0...3	–
RBSY_F	Receive busy flag	no	F/O	Binary	0/1	0...8191
XBSY_F	Text busy flag	no	F/O	Binary	0/1	0...8191
IN_BUSY	Input Busy	no	F/O	Binary	0/1	0...8191

Legend :
- C Counter
- F Flag
- I Input
- K Special function
- O Output
- R Register

Internally used and reserved elements with symbolic names:

Seven work registers and 6 work flags are used internally by the FB. These registers and flags contain intermediate values during data entry and therefore can only be used by this FB. Only the base addresses of these elements need to be defined in the module.

Symbol	Description	Data		Address
		Type	Format	
WORK_R	Base address of 7 used work registers	R	Integer	0...4089 (+6)
WORK_F	Base address of 6 used work flags	F	Binary	0...8186 (+5)

Key allocation:

Since keys can be designated according to specific applications, symbols can be used to allocate any desired ASCII code to the keys.

The defaults are the standard key designations. The numeric keys (0...9) should not be reallocated, otherwise an error will occur when the ASCII value is converted to decimal.

Symbol	**Description**	**Data**		**Value**
		Type	Format	
K_BS	Backspace key	K	ASCII	0...255
K_CR	Carriage return key	K	ASCII	0...255
K_DP	Decimal point key	K	ASCII	0...255
K_SIGN	Negative sign key	K	ASCII	0...255
K_0	0 key	K	ASCII	48
K_1	1 key	K	ASCII	49
K_2	2 key	K	ASCII	50
K_3	3 key	K	ASCII	51
K_4	4 key	K	ASCII	52
K_5	5 key	K	ASCII	53
K_6	6 key	K	ASCII	54
K_7	7 key	K	ASCII	55
K_8	8 key	K	ASCII	56
K_9	9 key	K	ASCII	57

Calling the function block

```
CFB      INPUT      ; Input
         INP_TXT    ; Input text
     R   PARAM      ; Parameter
     R   DIGIT      ; Number of digits
     R   DECIMAL    ; Number of decimal places
     R   X_POS      ; X-position
     R   Y_POS      ; Y-position
     F   Sign       ; Sign input yes/no (1/0)
```

Detailed description of inputs and outputs

- Input text "INP_TXT":

  This text is transmitted the first time the FB is called. The value of the element to be edited (register/counter) is only displayed when the FB outputs this text, and must be represented in the text. Apart from this, the text can be any size and can contain any characters. The current value of the element can be displayed in any format, however it is recommended that same format is used for both the input and the display of the data.

  Example:

```
TEXT   INP_TXT "<12>"                        ; Clear display
               "PARAMETER INPUT<10><13>"
               "================<10><13>"
               "Value : $%00.3d$",PARAM.04T,"<10><13>"
               "Accept value  [CR]"
```

- Input parameter "PARAM":

  This parameter indicates which register or counter is to be changed.

- Number of digits "DIGIT":

  This value defines the input field size. The register value defines the number of digits including the minus sign and decimal point. The number of digits entered is monitored and limited during input.

  Note: the last digit of the display line must not be used for the entry field.

- Number of decimal places "DECIMAL":

  Fixed point format is used, this defines the number of decimal places. If no decimal point is required, use a value of 0 in this register. The number of decimal places is monitored and limited during input.

  Example:

```
                    DIGIT = 8
                 ┌──────┴──────┐
Input field  1 2 3 4 . 5 6 7
                          └─┬─┘
                        DECIMAL = 3
```

- Cursor position "X_POS"/"Y_POS":

  Defines the position for the first character of the input field.

- Leading sign "SIGN":

  Defines the position for the first character of the input field.
  "SIGN" = 0 —> Input of minus sign disabled.
  "SIGN" = 1 —> Input of minus sign enabled.

- Sign key "K_SIGN":

  Defines the ASCII code for the minus key.
  A leading plus sign cannot be entered.

- Serial channel number "CHAN_N":

  Defines the serial channel number. The serial channel must be assigned in mode C before calling the FB. (Possible assignment modes for the PCD7.D100 terminal are: MC0, MC1 and MC2).

- Serial channel diagnostic flags "RBSY_F" / "XBSY_F":

  Addresses for the RBSY_F and XBSY_F flags must agree with the diagnostic flag addresses defined by the SASI instruction.

- Input busy flag "IN_BUSY":

  The input busy flag "IN_BUSY" must initially be zero otherwise the FB will not function correctly. --> Reset the "IN_BUSY" flag in XOB 16. The flag is set high the first time the FB is called. The flag is reset when a carriage return is received.

Input/change of a parameter:

The first time the FB is called, the input text is output, the "IN_BUSY" flag is set, and the cursor is positioned according to FB parameters "X_POS" and "Y_POS". It is then possible to enter a number (with optional minus) via the keyboard. If the first key depression is numerical, a preceding minus or the decimal point, the parameter input field is deleted.

Input field size is limited by the maximum number of digits (defined with FB parameter "DIGIT"). The maximum number of digits is monitored and limited by the FB during input. When the carriage return (CR) key is depressed, the number entered is stored in the "PARAM" register or counter, the "IN_BUSY" flag is reset and the data input ends.

During input of a value (while the "IN_BUSY" flag is high) the FB must be called cyclically by the user program.

Input format of numerical value to the PCD7.D250 terminal:

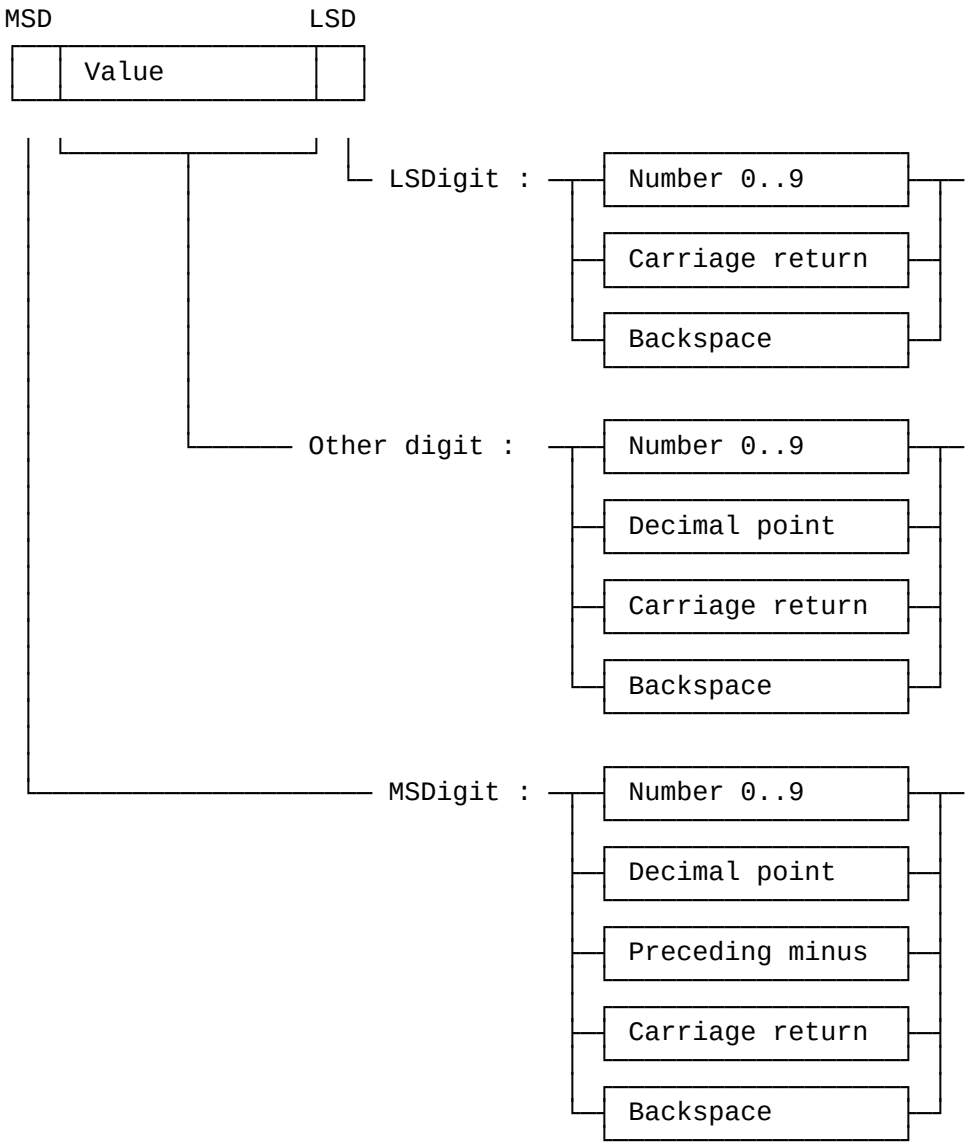

The following example demonstrates the principles.

FB parameters contain the following values:

```
Input text   "INP_TXT"  : "<12>"  ; Clear display
                          "PARAMETER INPUT<10><13>"
                          "===============<10><13>"
                          "Value : $%00.3d$",PARAM.04T,"<10><13>"
                          "Accept value  [CR]"

Register  "PARAM"       : 567890
Register  "DIGIT"       : 8
Register  "DECIMAL"     : 3
Register  "X_POS"       : 40
Register  "Y_POS"       : 34
```

The minus sign is defined as:

K_SIGNEQUK 45 ; Negative sign key

When the FB is first called, this text appears on the display:

```
PARAMETER INPUT
===============
Value : 567.890
Accept value  [CR]
```

The data is then input according to the following table. Only the data input field is affected, the rest of the display remains unchanged during input.

Key depressed	ASCII code dec	Input field display (max. 8 digits)	Register/ counter "PARAM"	Input busy flag "IN_BUSY"
				0
(1st FB call)		567.890	567890	1
3	51	3_	567890	1
5	53	35_	567890	1
7	55	357_	567890	1
<-	8	35_	567890	1
<-	8	3_	567890	1
<-	8	_	567890	1
<-	8	567.890	567890	1
1	49	1_	567890	1
2	50	12_	567890	1
3	51	123_	567890	1
4	52	1234_	567890	1
.	54	1234._	567890	1
7	55	1234.7_	567890	1
8	56	1234.78_	567890	1
9	57	1234.789	567890	1
4	52	1234.784	567890	1
<-	8	1234.78_	567890	1
<-	8	1234.7_	567890	1
CR	13	1234.7	1234700	0
				0
(1st FB call)		1234.700	1234700	1
-	45	-_	1234700	1
8	56	-8_	1234700	1
4	52	-84_	1234700	1
6	54	-846_	1234700	1
CR	13	-846	-846000	0

Using the function block in user programs

The FB is located in file D1_INP.SRC. This file also contains all symbol definitions necessary for use with the FB.

Any symbols which are used globally in the user program are defined in the file as EXTN (external) and must be defined in another user file. This means that the file D1_INP.SRC only has to be assembled once and then linked with the other user files.

Global symbols: INPUT, CHAN_N, IN_BUSY, RBSY_F, XBSY_F

If the FB is to be included in the user program by means of the assembler directive $INCLUDE, the EXTN definitions must be deleted or replaced by local symbol definitions.

9. Comparison PCD7.D202 ↔ PCD7.D250

Functions	..D202	..D250
Front		
Display Front dimensions Function keys Labelling strip Basic print Serial interfaces	4 x 20 characters 141 x 181 mm 4 with LED on function keys = No. 1: RS 232	8 x 40 / 4 x 20 characters (switch) 305 x 120 mm 8 with LED on function keys and SAIA label = No. 1: RS 232 or No. 0: for module ..F2.. (RS 422 or TTY)
Instruction set / setup	..D202	..D202 plus: – switch 8 x 40 to 4 x 20 mode – cursor positioning enhanced (8 x 40) – switch interface no. 1 to no. 0 – full character set IBM CodePage 437 – start and end of inverted characters – transparent mode
FBs Editor tool (Dialog library)	..D202 old and new version	..D202 modified HMI editor in preparation

Notes :

10. Interface connection cables RS 232

The cables are double shielded with metallized connectors, in 2.5 m standard lengths.

Type PCD7.K412: For interface RS 232
without handshaking RTS/CTS

Connection between terminal ..D250 and PGU socket (channel 0) of all PCD processor modules.

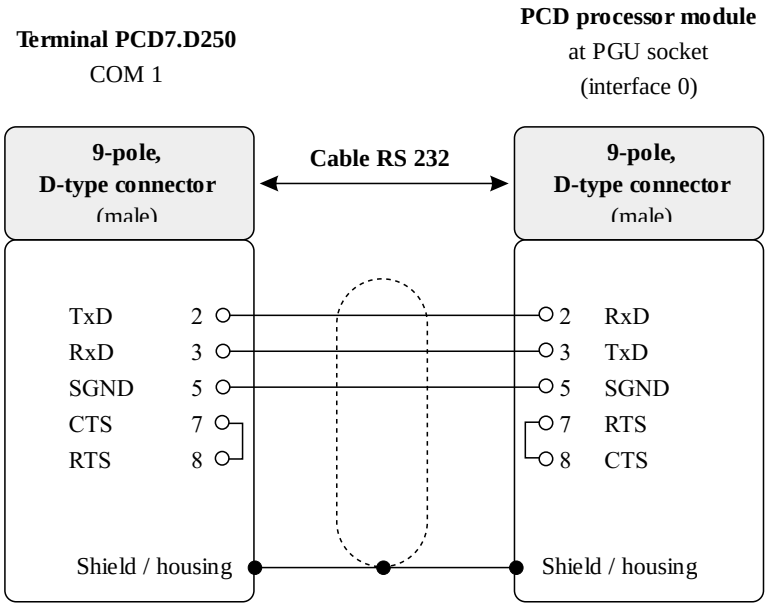

Type PCD7.K422: For interface RS 232
without handshaking RTS/CTS

Connection between terminal ..D250 and base modules of the series PCD1 and PCD2 or bus module of the series PCD4. Free cable ends (with sleeves).

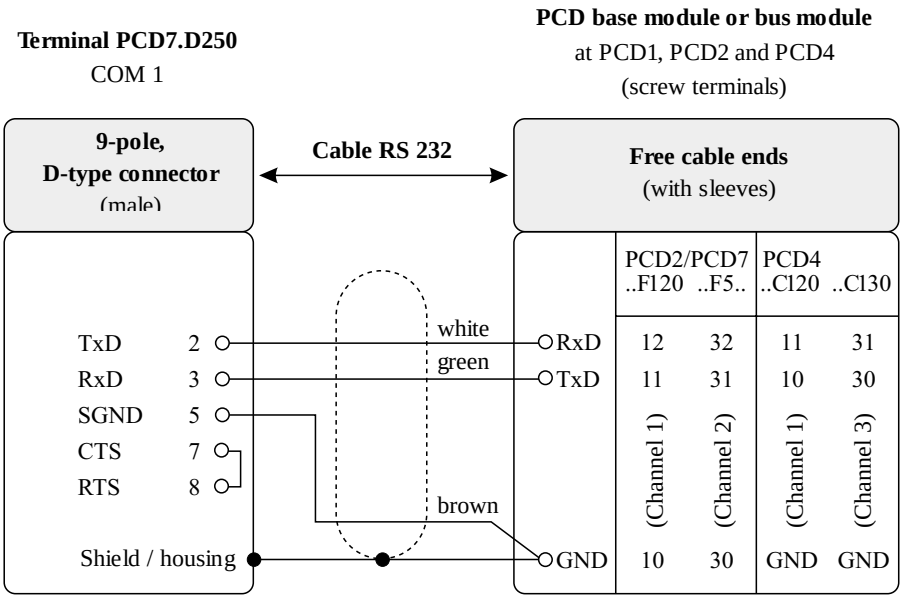

From :

Company :
Department :
Name :
Address :

Tel. :

Date :

Send back to :

SAIA-Burgess Electronics Ltd.
Bahnhofstrasse 18
CH-3280 Murten (Switzerland)
http://www.saia-burgess.com

BA : Electronic Controllers

Industrial Terminal PCD7.D250

If you have any suggestions concerning the SAIA® PCD, or have found any errors in this manual, brief details would be appreciated.

Your suggestions :